Pos. EE - W1, Quantity: 1
Finish: HP
Job: DWL - 23 Prince Albert Road - REV
System: SMA Slide 2000
Exterior View

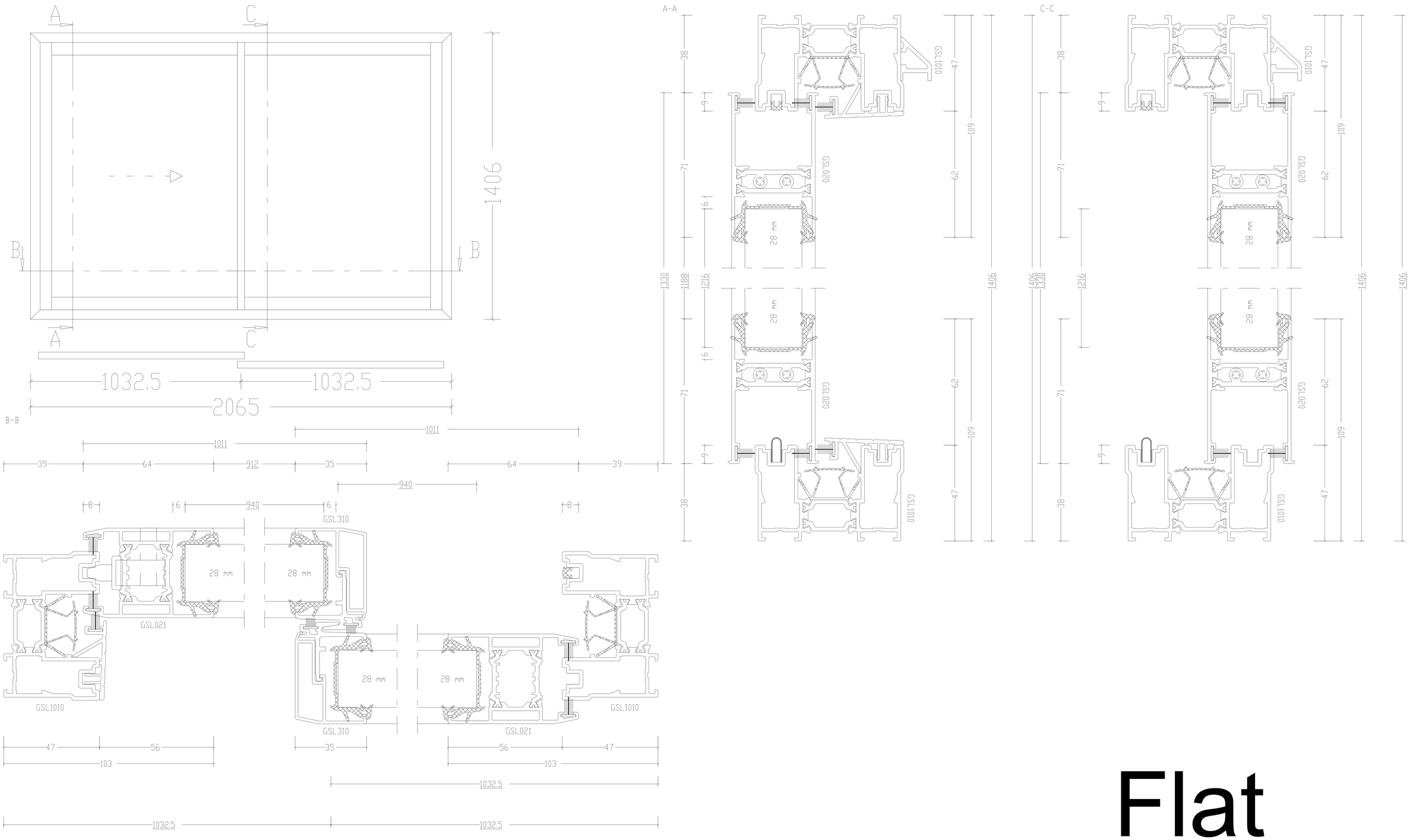

Flat

Pos. NE - EE W1, Quantity: 1
Finish: HP
Job: DWL - 23 Prince Albert Road - REV
Exterior View

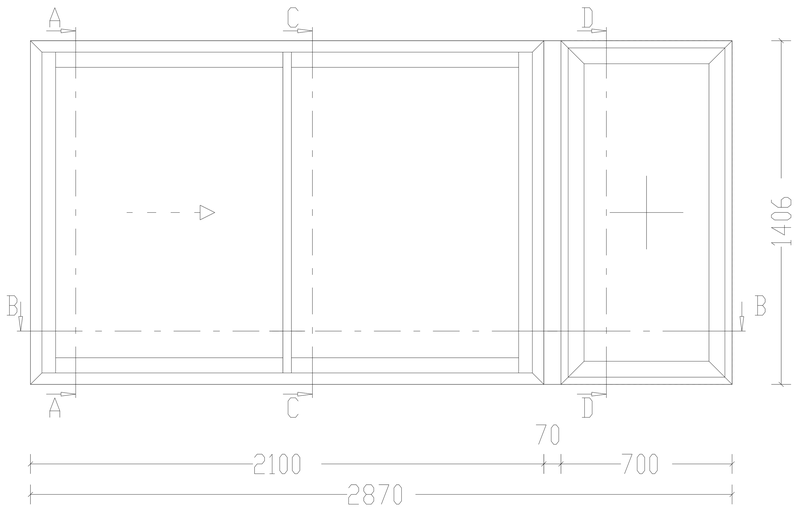

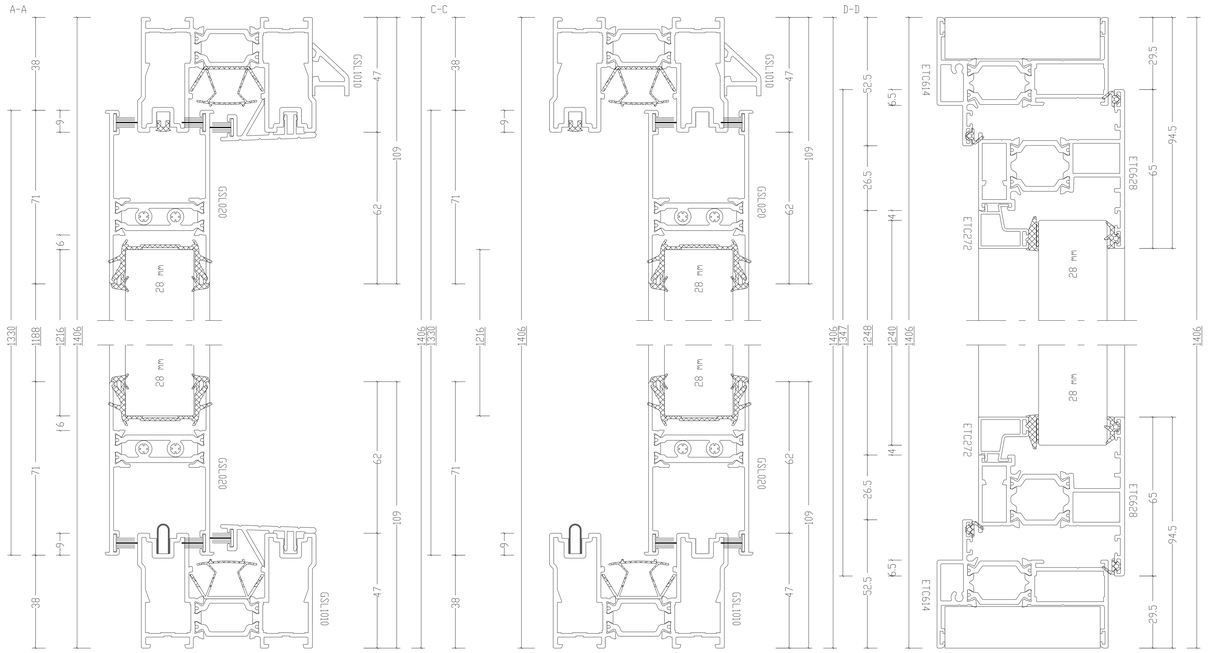

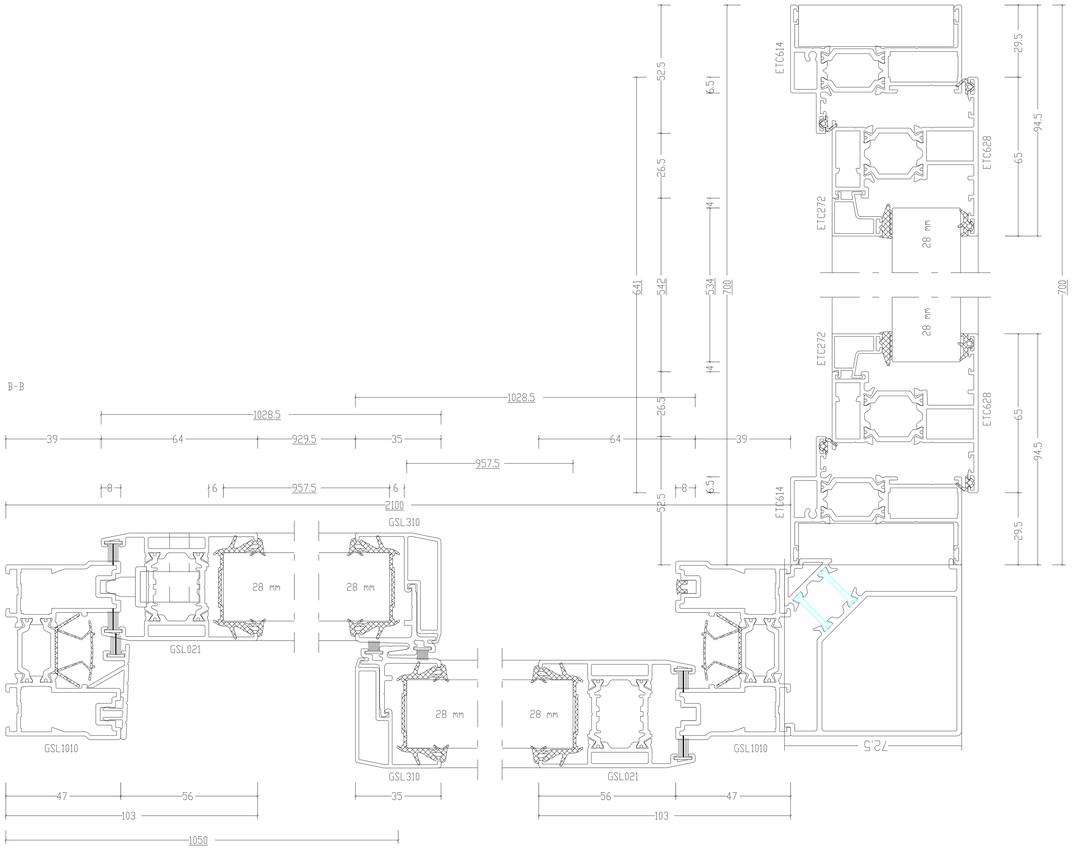

Flat

Pos. NE - W4, Quantity: 1
Finish: HP
Job: DWL - 23 Prince Albert Road - REV
System: SMA Alitherm 600 Square With Foam Infill
Exterior View

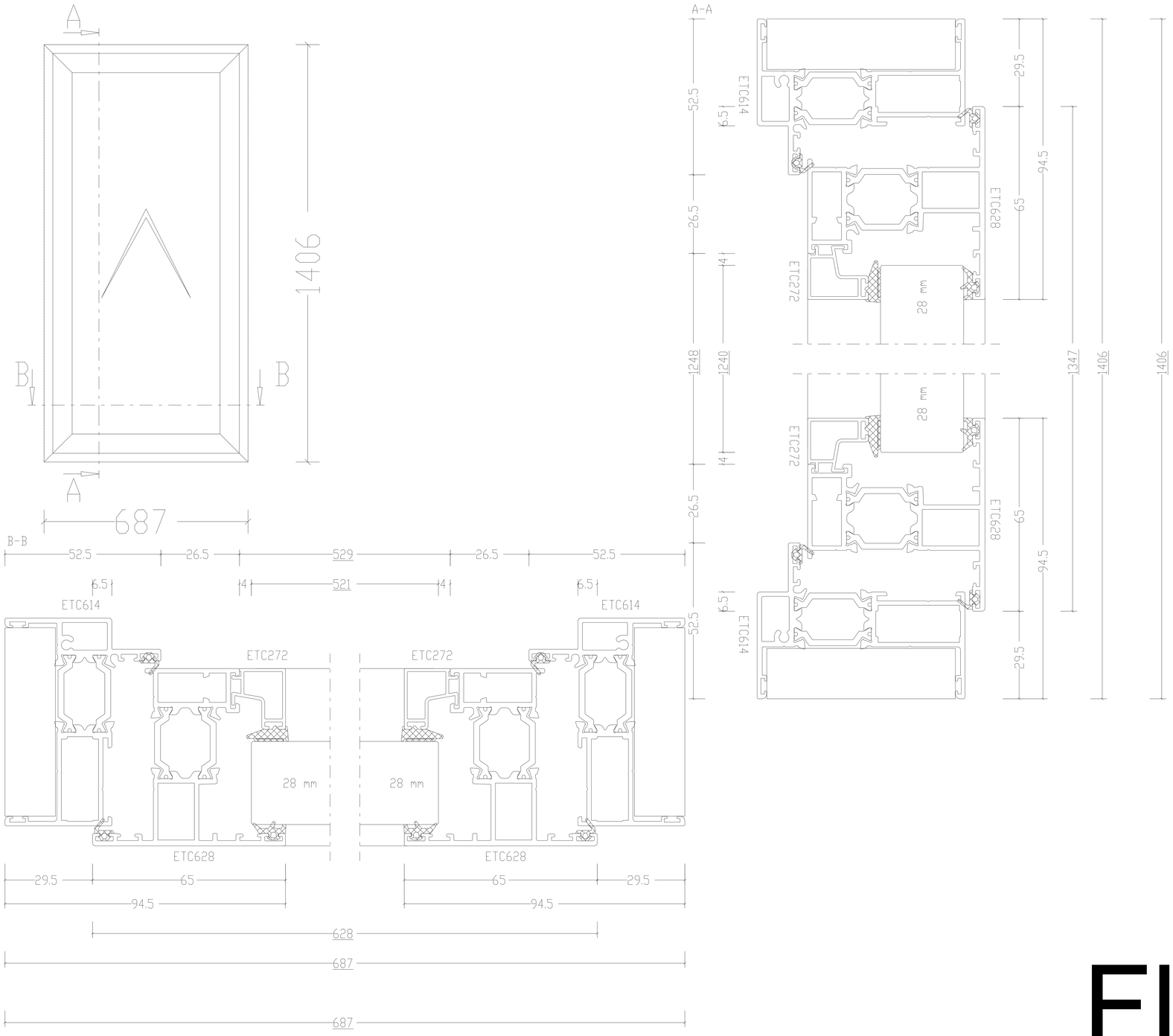

Flat

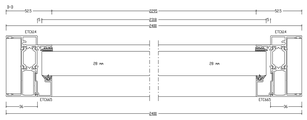

Pos. SE - WE - W1, Quantity: 1
Finish: HP
Job: DVL - 23 Prince Albert Road - REV
Exterior View

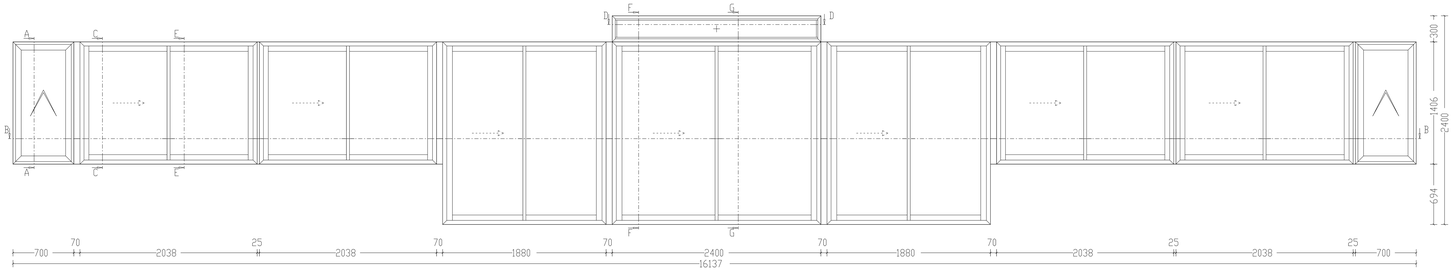

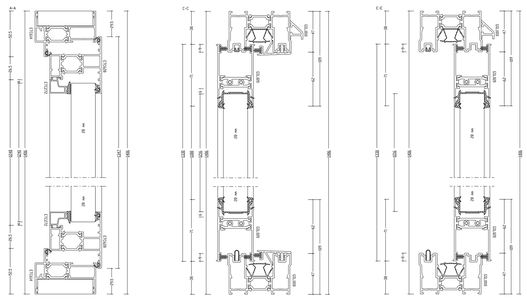

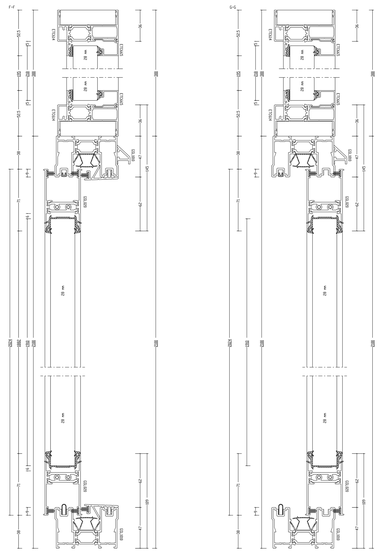

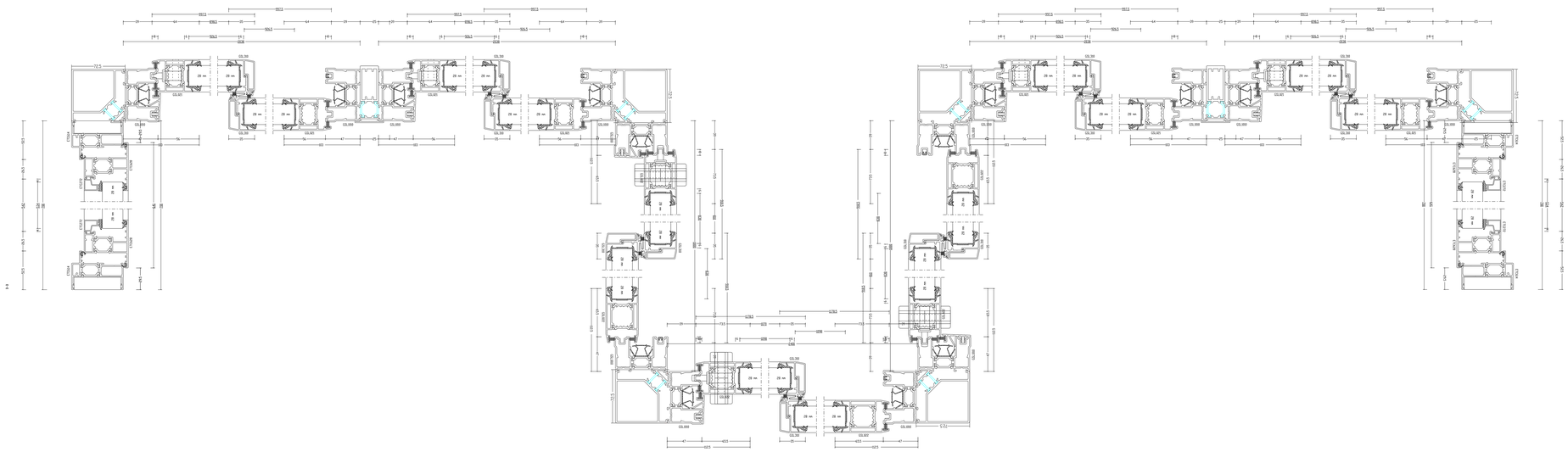

Flat

Pos. SS - W2, Quantity: 1
Finish: HP
Job: DWL - 23 Prince Albert Road - REV
System: SMA Alitherm 600 Square With Foam Infill
Exterior View

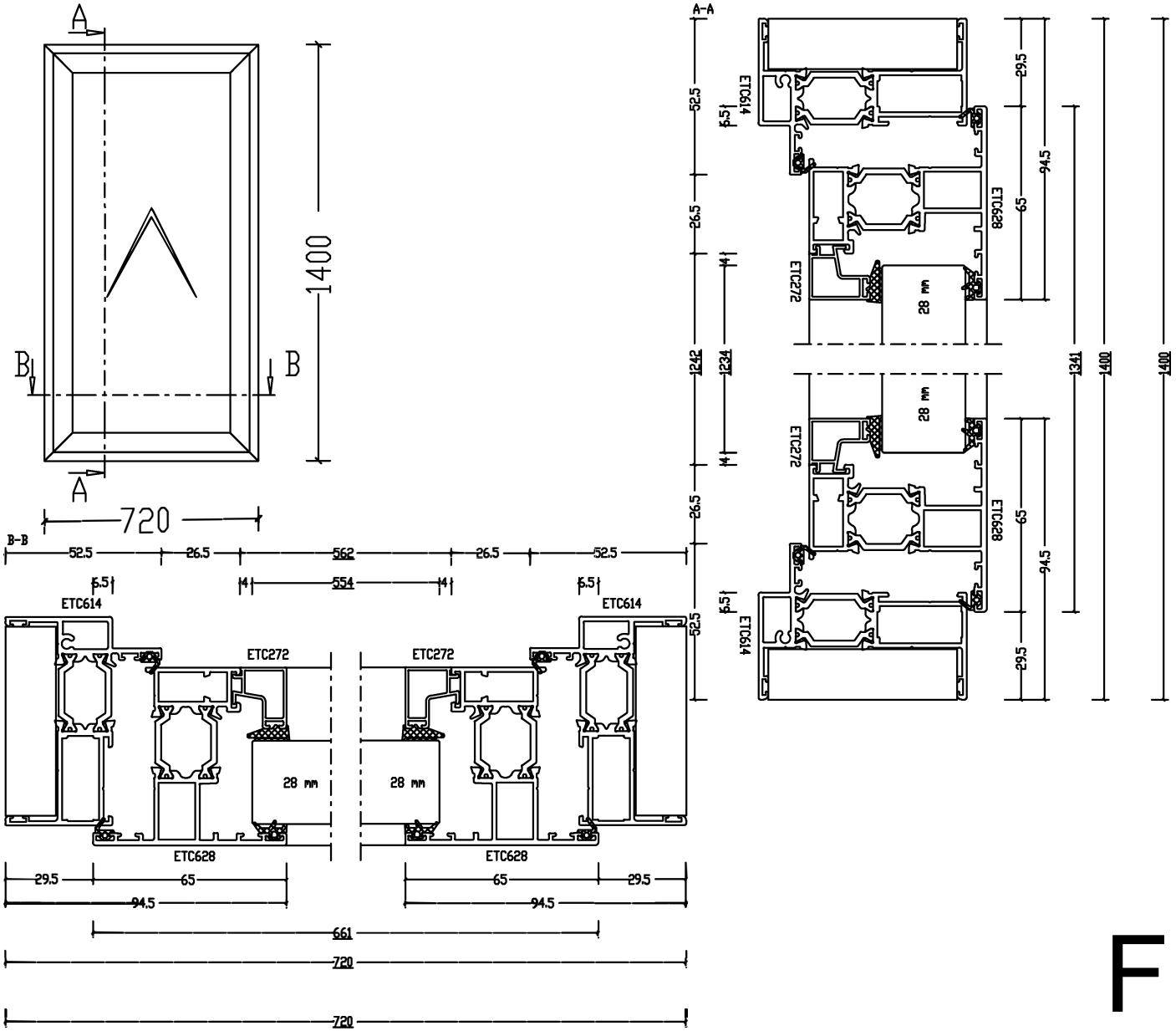

Flat 10