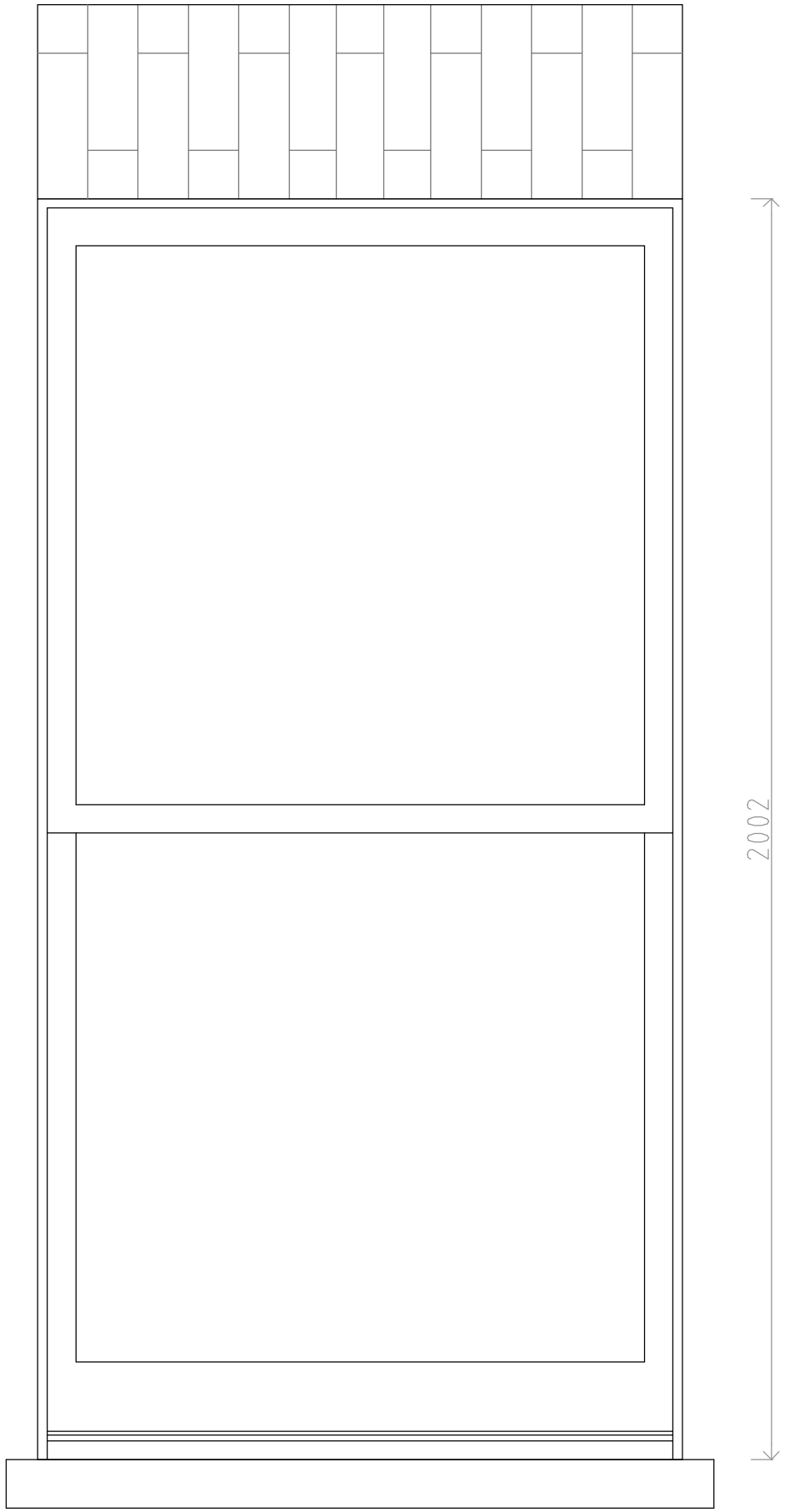

ELEVATION

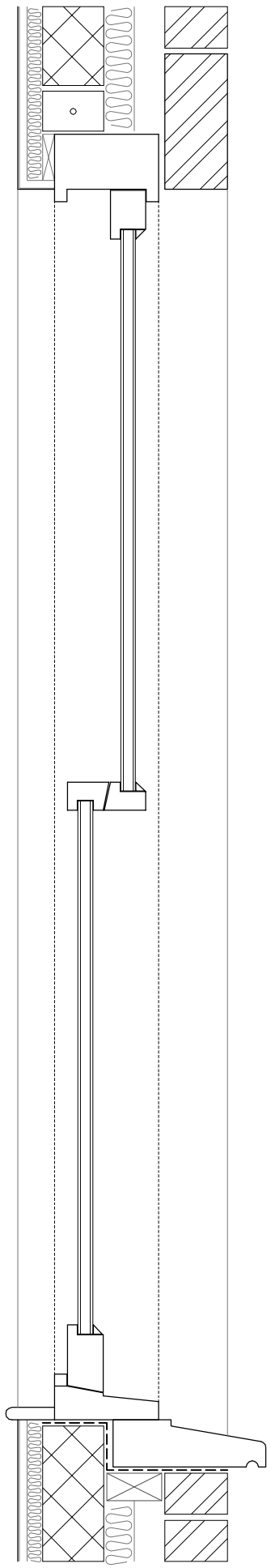

SECTION

PLAN

Revisions

Hodes Row
London
NW3 2JZ

Mr G Hodes

Window details for
Window 7 & 8

Scale:	Date:	Ref:
1:10@A3	APR '17	590/29

CLARKE ASSOCIATES
CHARTERED BUILDING SURVEYORS
5 Abbey Parade, Ealing, London, W5 1EE
Tel: 020 8997 0309 Fax: 020 8991 0469
E- mail :- post@clarkeassociatesuk.com