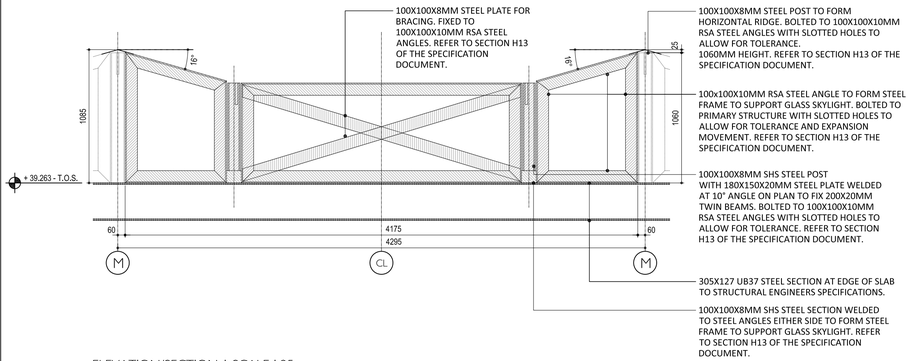

ELEVATION/SECTION 1 SCALE:1.25

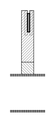

SECTION C-C'

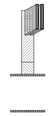

SECTION D-D'

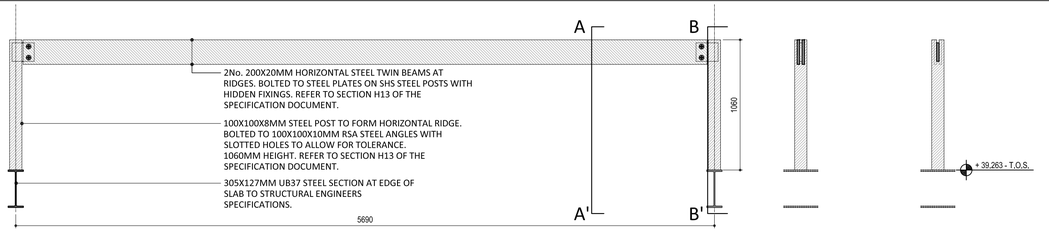

SECTION/ELEVATION 2 RIDGE BEAM SCALE:1.25

SECTION A-A'

SECTION B-B'

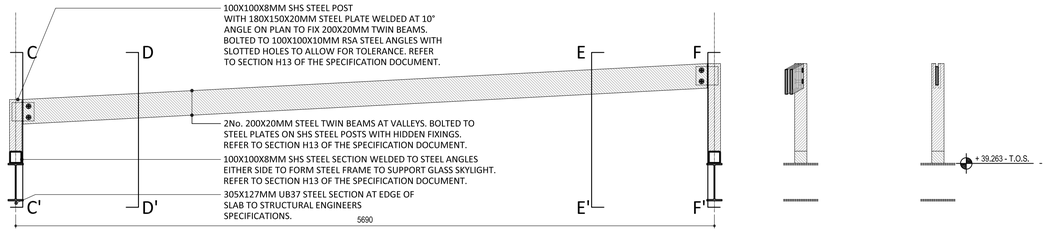

SECTION/ELEVATION 3 VALLEY BEAM SCALE:1.25

SECTION E-E'

SECTION F-F'

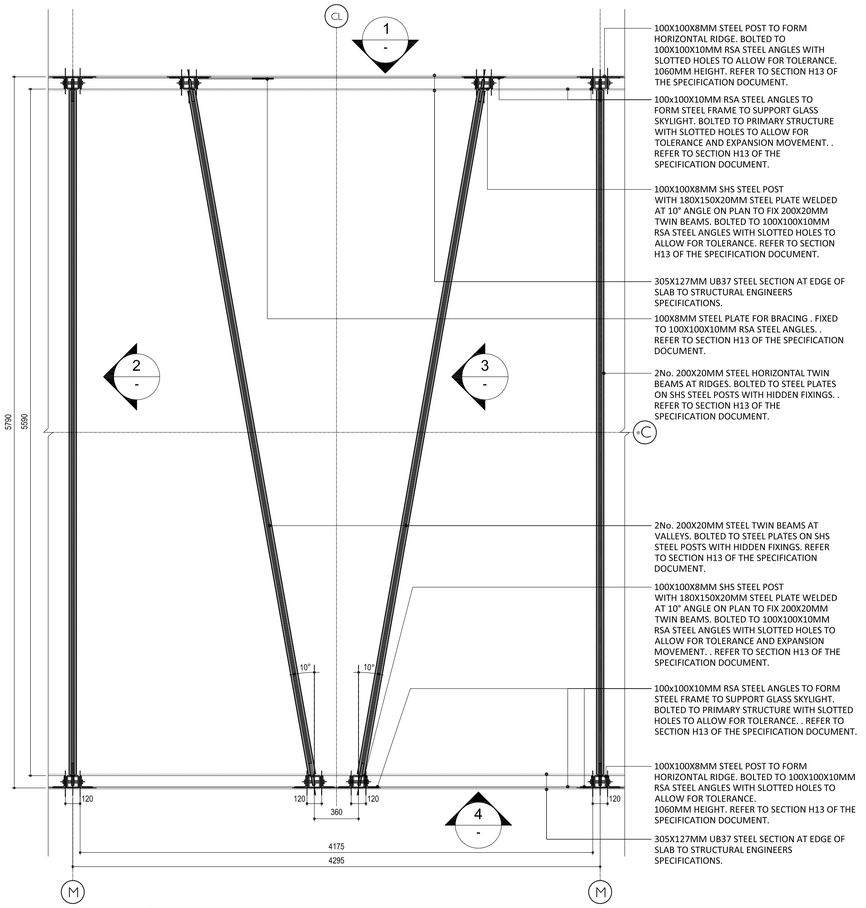

MODULE ROOFLIGHT REFERENCE PLAN SCALE:1.25

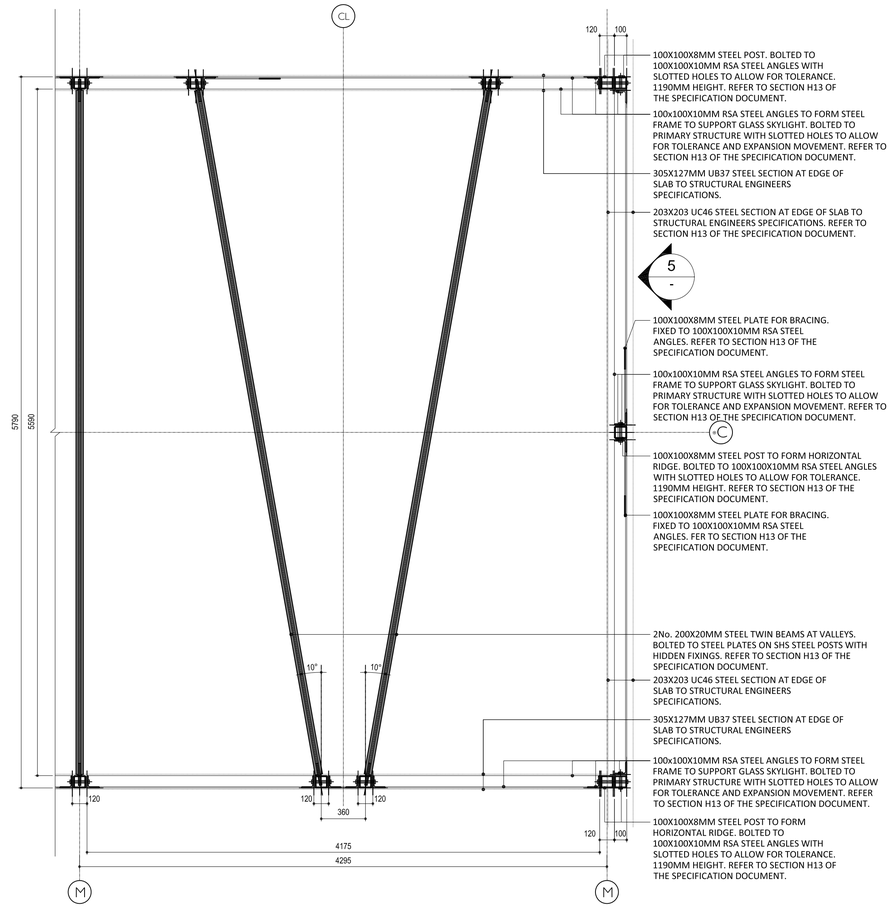

MODULE EDGE OF ROOFLIGHT REFERENCE PLAN SCALE:1.25

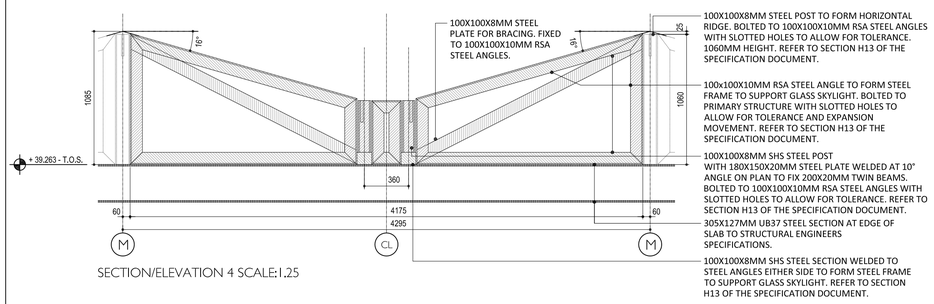

SECTION/ELEVATION 4 SCALE:1.25

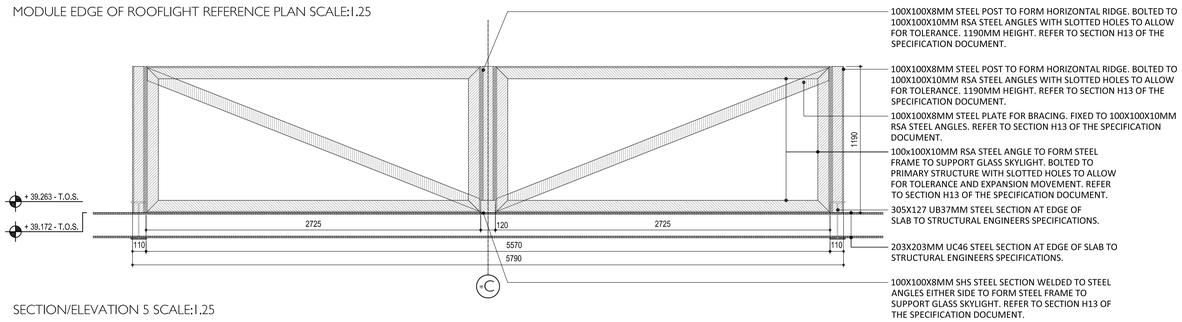

SECTION/ELEVATION 5 SCALE:1.25

SITE / LOCATION PLAN

DO NOT SCALE FROM THIS DRAWING

THE CONTRACTOR SHALL CHECK AND VERIFY ALL DIMENSIONS ON SITE AND REPORT ANY DISCREPANCIES TO FORME BEFORE PROCEEDING WITH THE WORKS

PAPER SIZE

A1

This drawing is copyright protected and must not be reproduced without the prior written agreement© forme uk

NOTE:

ALL STRUCTURAL STEELWORK TO RECEIVE FIRE PROTECTIVE PAINT.
BOLLOM BM066 FIRESHIELD ULTRA UNIVERSAL TO PROVIDE 90MINS FIRE PROTECTION AND OVERPAINTED WITH BOLLOMS FLAMEGUARD ULTRA GLOSS (WHITE)

NBS

STRUCTURAL SPECIFICATION - 16861/MC/Spec

ARCHITECTURAL SPECIFICATION - 5001_20_900 ( )

REV	DATE	BY	NOTES

PROJECT TITLE

Greater London House

Lightwell Extension
London NW1 7AW

DRAWING TITLE

Skylight Module
Framing Plans & Elevations

SCALE: 1:50@A1

REVISION:

DATE: 12/16

ORIGINATOR: AD

CHECKED: RCJ

APPROVED:

STATUS

Tender Stage 2

DRAWING NUMBER

5001_37_301

forme UK
ARCHITECTURE LTD

NUTMEG HOUSE 60 GAINSFORD STREET
BUTLERS WHARF LONDON SE1 2NY

T +44 (0)20 7378 1340 F +44 (0)20 7407 9019
E DESIGN@FORMEUK.COM WWW.FORMEUK.COM