DETAIL 01

SCALE 1:5

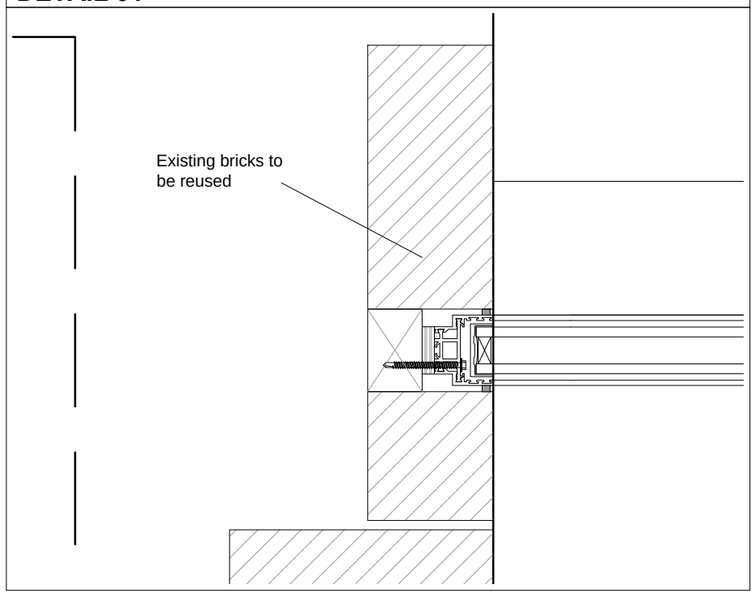

DETAIL 02

SCALE 1:5

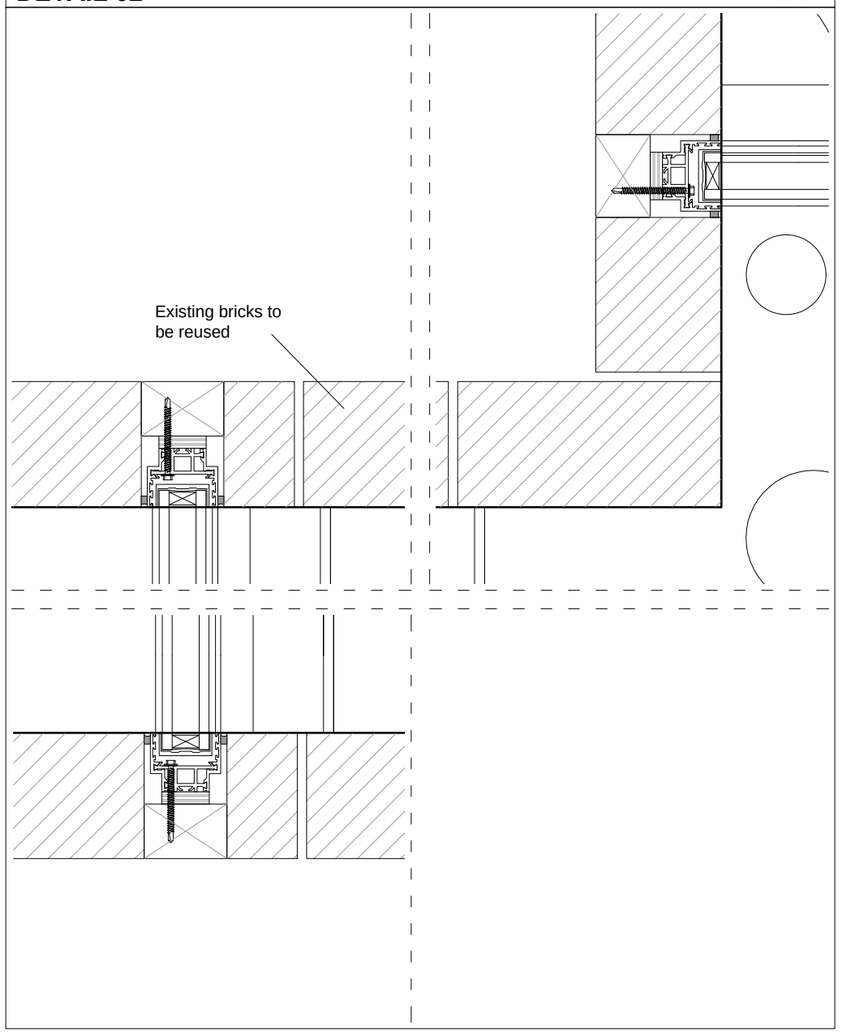

LBMV architects

Luigi Montefusco Ltd
27 Elizabeth Mews
NW3 4UH London
T+44 (0) 207 483 3880
info@lbmvarchitects.com
www.lbmvarchitects.com

DRAWINGS STATUS		DRAWN	CHECKED
PLANNING PERMISSION	A3	MC, UG	LM
PROJECT TITLE		DATE	SCALE
PLANNING APPLICATION / LISTED BUILDING CONSENT 06 Lyndhurst Gardens NW3 5NR		12.12.2016	1:5@A3
		DRAWING TITLE	
		DETAILS	
		JOB NO	DRAWING NO
		0050	A4001

GENERAL NOTE

- This drawing should be removed from currency immediately when a revised version is issued.
- All dimensions to be checked on site by the contractor. Discrepancies to be reported before proceeding with the works.
- This drawing is copyrighted.
- All dimensions in mm's.

LEGEND

1.100	0	1	5 m
1.50	0	1	2 m
1.25	0	100	1000mm
1.20	0	100	1000 mm
1.10	0	100	500 mm
1.5	0	100	200 mm

REV	DESCRIPTION	DATE	NAME

DETAIL 03

SCALE 1:5

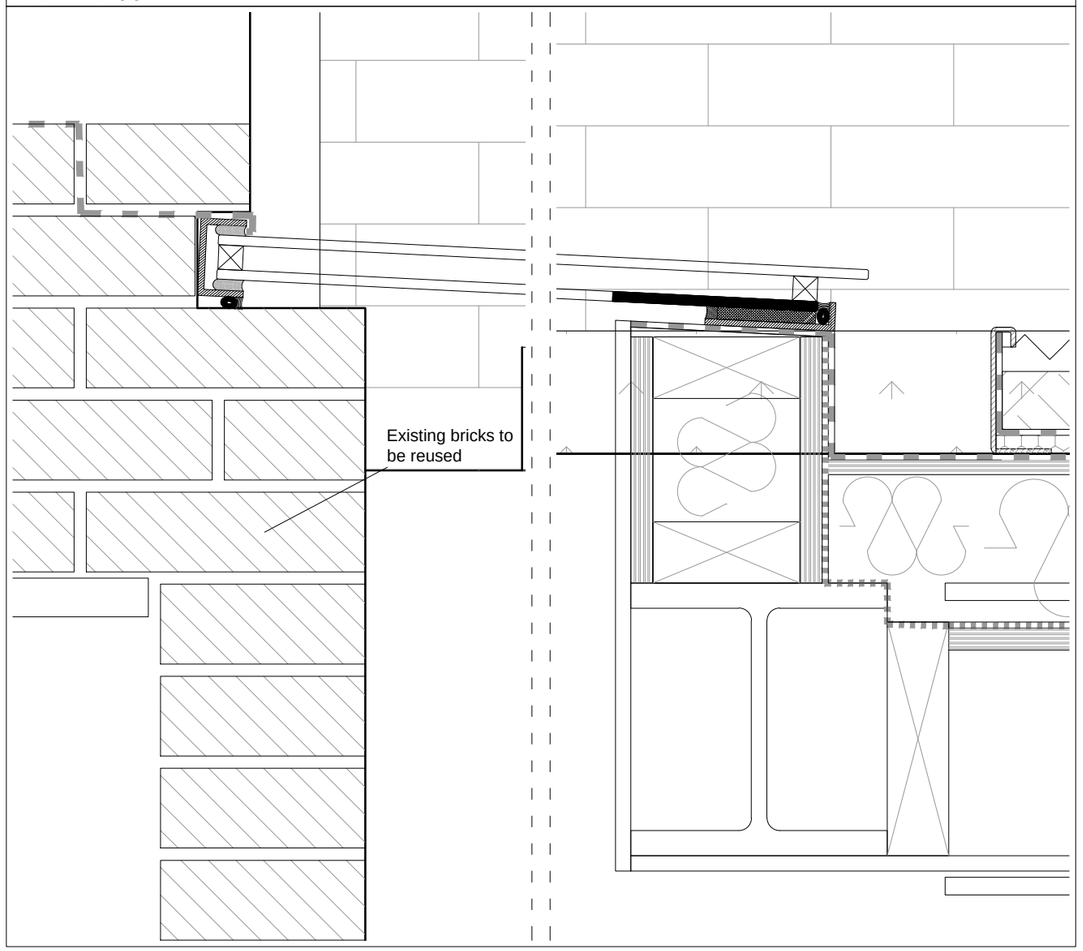

DETAIL 04-STAIR

SCALE 1:10

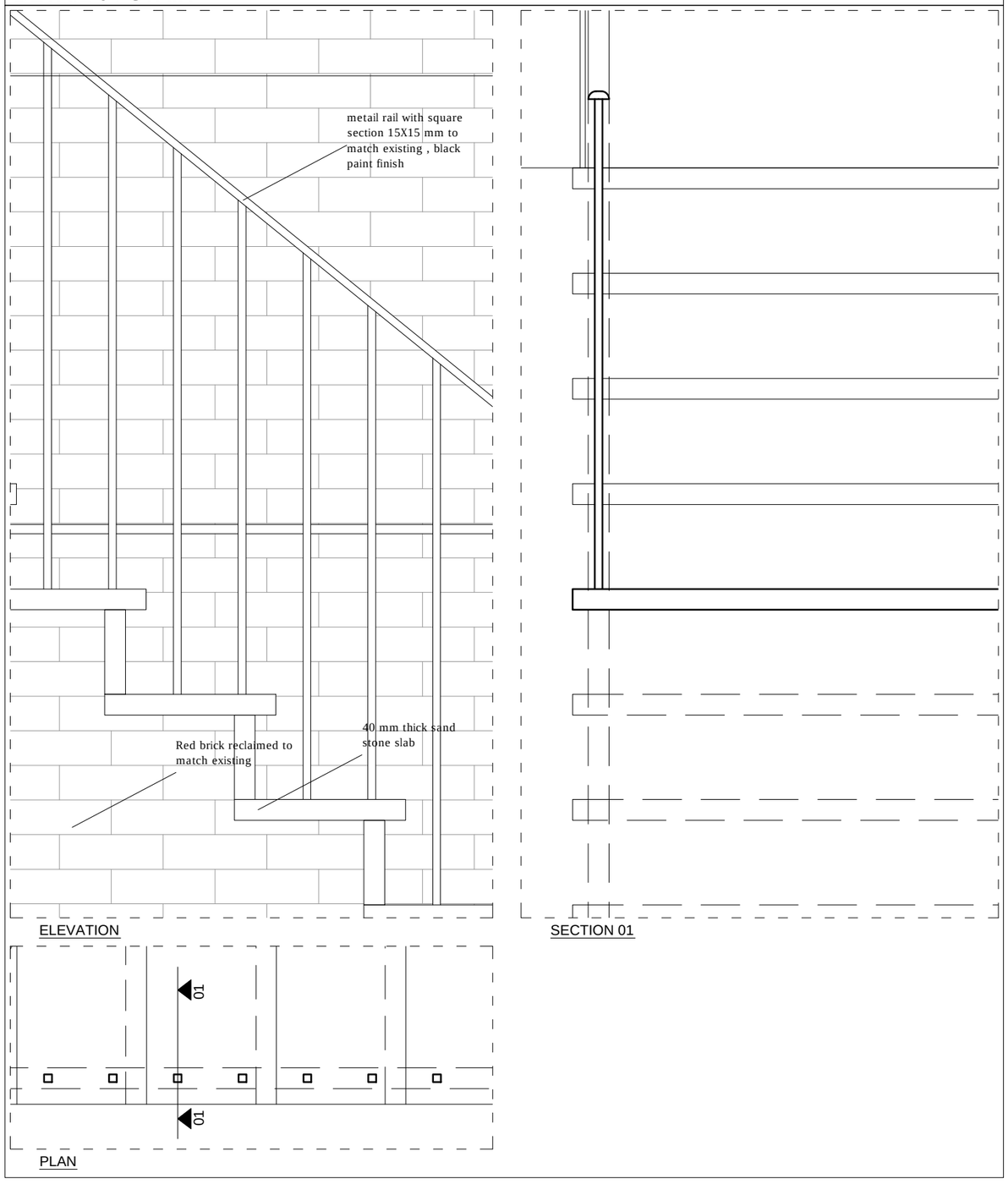

LBMV architects

Luigi Montefusco Ltd
27 Elizabeth Mews
NW3 4UH London
T+44 (0) 207 483 3880
info@lbmvarchitects.com
www.lbmvarchitects.com

DRAWINGS STATUS		DRAWN	CHECKED
PLANNING PERMISSION	A3	MC, UG	LM
PROJECT TITLE		DATE	SCALE
PLANNING APPLICATION / LISTED BUILDING CONSENT 06 Lyndhurst Gardens NW3 5NR		12.12.2016	1:10@A3 1:5@A3
		DRAWING TITLE	
		DETAILS	
		JOB NO	DRAWING NO
		0050	A4002

GENERAL NOTE

- This drawing should be removed from currency immediately when a revised version is issued.
- All dimensions to be checked on site by the contractor. Discrepancies to be reported before proceeding with the works.
- This drawing is copyrighted.
- All dimensions in mm's.

LEGEND

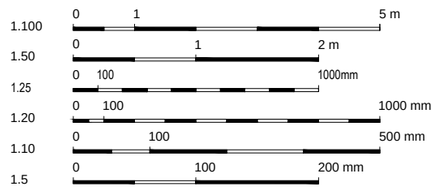

REV	DESCRIPTION	DATE	NAME

EXISTING FLOOR DETAILS

SCALE 1:5

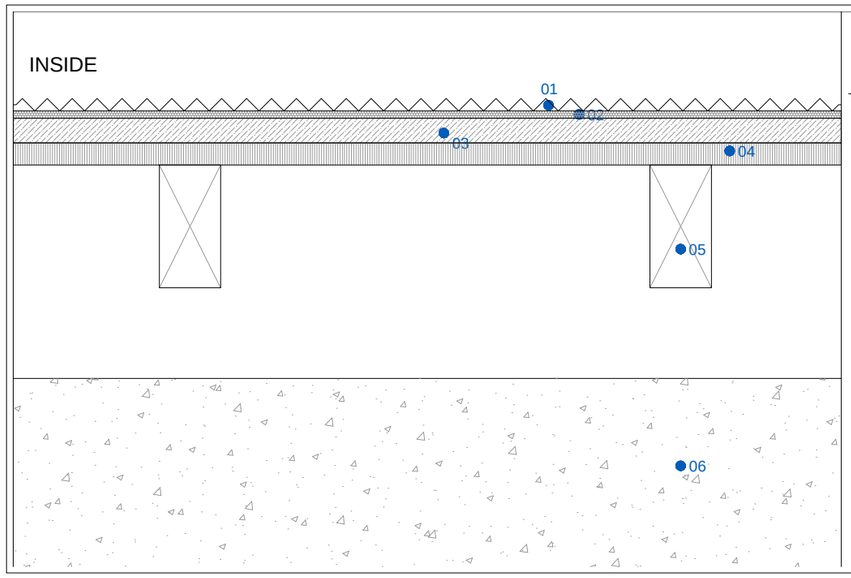

EFL-01

1:5

EXISTING CARPET FLOOR
ON BOARDS

01 CARPET
02 UNDERLAYER
03 HARBOARD
04 PINE BOARD, OF
RECENT MANUFACTURE
05 EXISTING JOISTS
06 CONCRETE

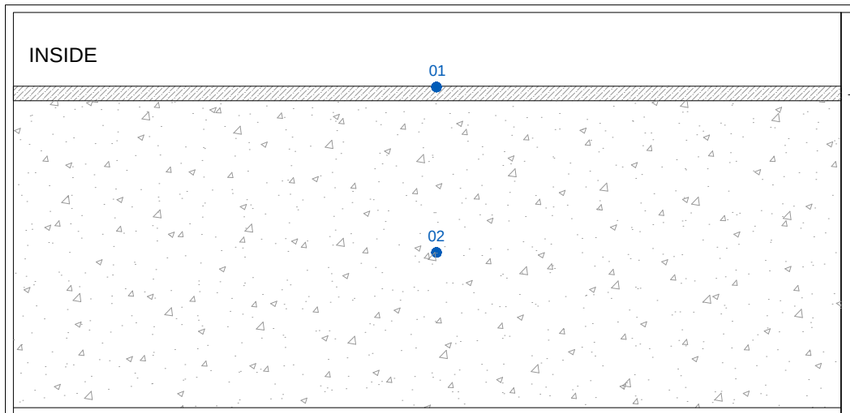

EFL-03

1:5

EXISTING CARPET FLOOR ON
CONCRETE SLAB

01 12 mm PLYWOOD
02 250 mm CRONCRETE SLAB

PROPOSED FLOOR DETAILS

SCALE 1:5

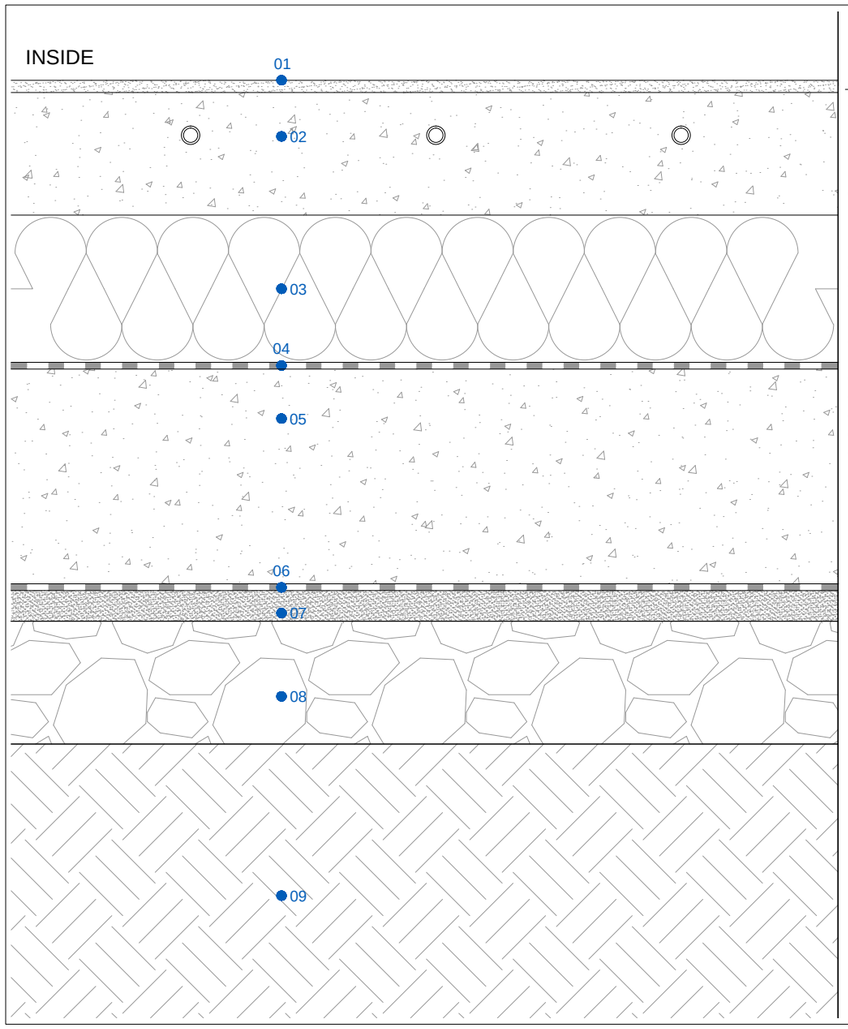

FC-01

1:5

CONCRETE FLOOR
ON UNDERFLOOR HEATING
IN SCREED
GROUND FLOOR

01 CONCRETE
02 100mm UNDER FLOOR HEATING
SYSTEM - TIMOLEON
IN SCREED
03 120MM RIGID INSULATION
KINGSPAN
04 POLYTHENE MEMBRANE
05 175MM CONCRETE SLAB
06 POLYTHENE MEMBRANE
07 25MM SAND
08 100MM BLINDED HARDCORE
GRAVEL
09 SOIL

LBMV architects

Luigi Montefusco Ltd
27 Elizabeth Mews
NW3 4UH London
T+44 (0) 207 483 3880
info@lbmvarchitects.com
www.lbmvarchitects.com

DRAWINGS STATUS		DRAWN	CHECKED
PLANNING PERMISSION	A3	MC, UG	LM
PROJECT TITLE		DATE	SCALE
PLANNING APPLICATION / LISTED BUILDING CONSENT 06 Lyndhurst Gardens NW3 5NR		12.12.2016	1:5@A3
		DRAWING TITLE	
		DETAILS	
		JOB NO	DRAWING NO
		0050	A4003

GENERAL NOTE

- This drawing should be removed from currency immediately when a revised version is issued.
- All dimensions to be checked on site by the contractor. Discrepancies to be reported before proceeding with the works.
- This drawing is copyrighted.
- All dimensions in mm's.

LEGEND

1.100	0	1	5 m
1.50	0	1	2 m
1.25	0	100	1000mm
1.20	0	100	1000 mm
1.10	0	100	500 mm
1.5	0	100	200 mm

REV	DESCRIPTION	DATE	NAME

EXISTING FLOOR DETAILS

SCALE 1:5

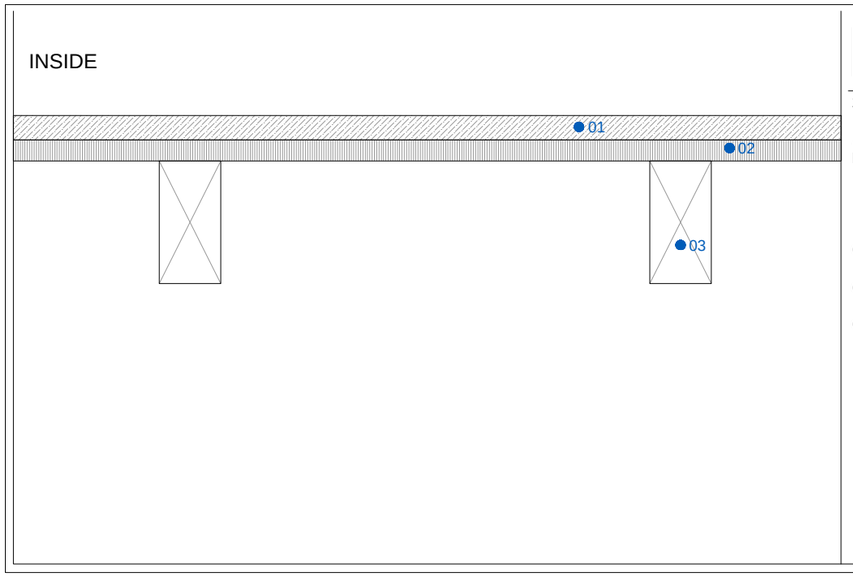

EFL-02

1:5

ASSUMED EXISTING TIMBER FLOOR ON BOARDS

01 ENGINEERED BOARD OF RECENT MANUFACTURE
02 TIMBER BOARD, ASSUMED OF RECENT MANUFACTURE
03 EXISTING JOISTS

PROPOSED FLOOR DETAILS

SCALE 1:5

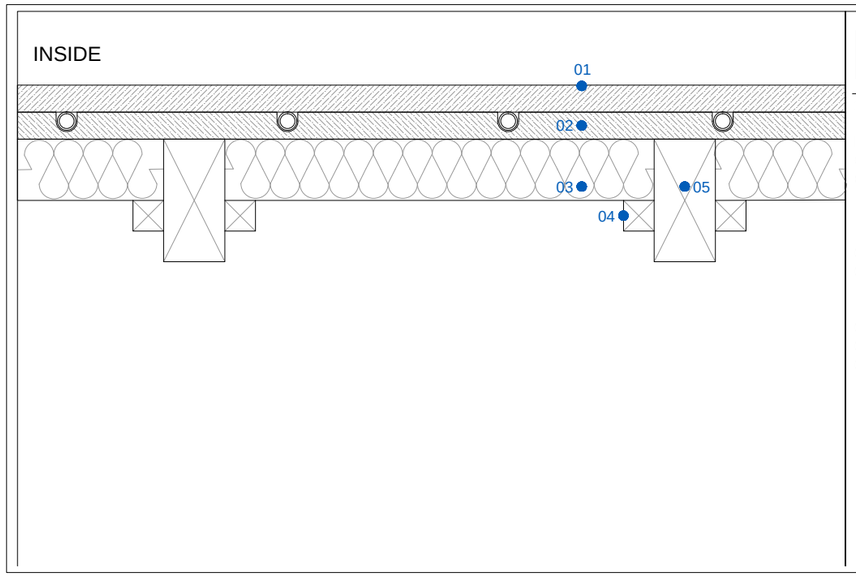

FT-01

1:5

ENGINEERED FLOOR
ON UNDERFLOOR HEATING
GROUND FLOOR

01 ENGINEERED BOARD
02 22MM UNDERFLOOR HEATING SYSTEM TIMOLEON TORON SYSTEM
03 50MM INSULATION
04 BATTENS
05 EXISTING JOISTS

LBMV architects

Luigi Montefusco Ltd
27 Elizabeth Mews
NW3 4UH London
T+44 (0) 207 483 3880
info@lbmvarchitects.com
www.lbmvarchitects.com

DRAWINGS STATUS		DRAWN	CHECKED
PLANNING PERMISSION	A3	MC, UG	LM
PROJECT TITLE		DATE	SCALE
PLANNING APPLICATION / LISTED BUILDING CONSENT 06 Lyndhurst Gardens NW3 5NR		12.12.2016	1:5@A3
		DRAWING TITLE	
		DETAILS	
		JOB NO	DRAWING NO
		0050	A4004

GENERAL NOTE

- This drawing should be removed from currency immediately when a revised version is issued.
- All dimensions to be checked on site by the contractor. Discrepancies to be reported before proceeding with the works.
- This drawing is copyrighted.
- All dimensions in mm's.

LEGEND

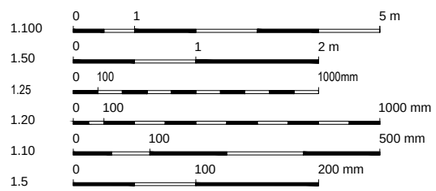

REV	DESCRIPTION	DATE	NAME

EXISTING CEILING DETAIL

SCALE 1:5

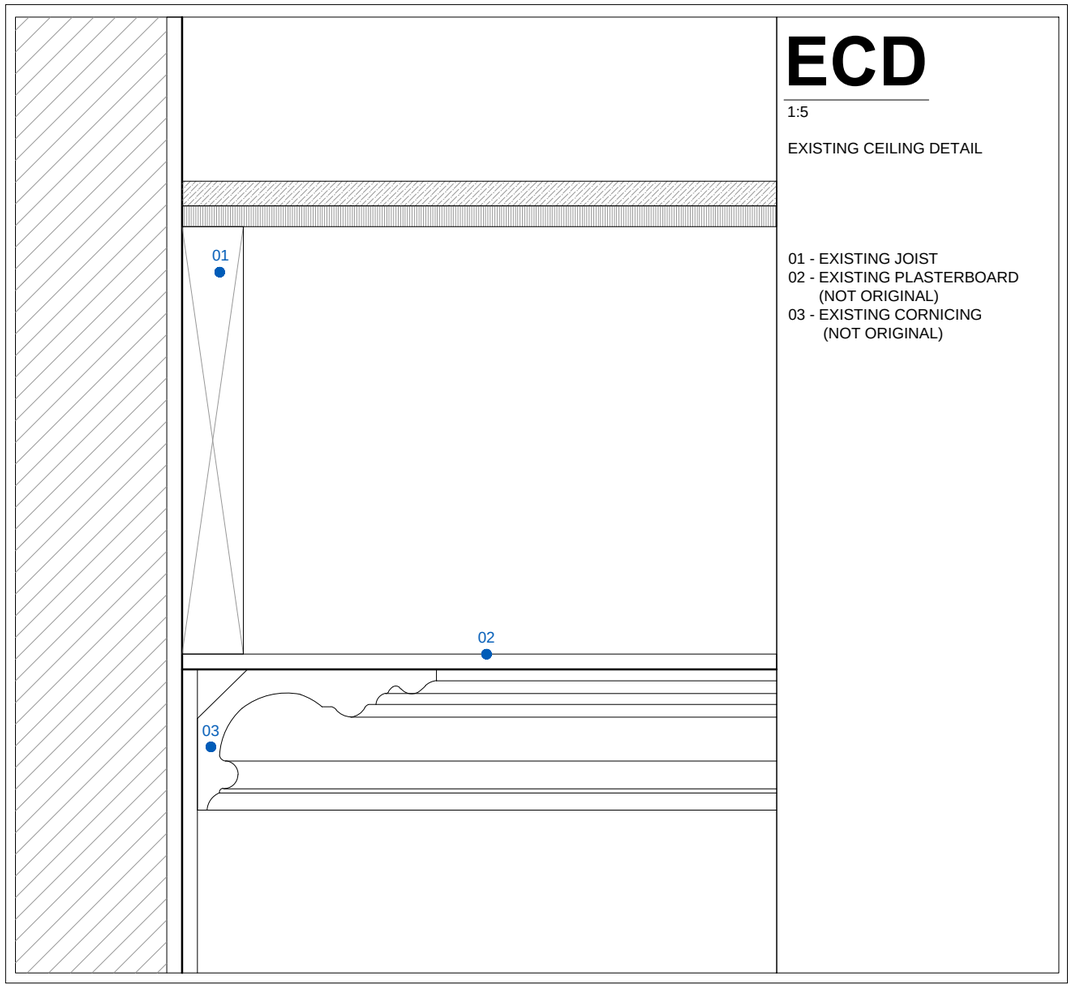

ECD

1:5

EXISTING CEILING DETAIL

01 - EXISTING JOIST
02 - EXISTING PLASTERBOARD (NOT ORIGINAL)
03 - EXISTING CORNICING (NOT ORIGINAL)

PROPOSED CIELING DETAIL

SCALE 1:5

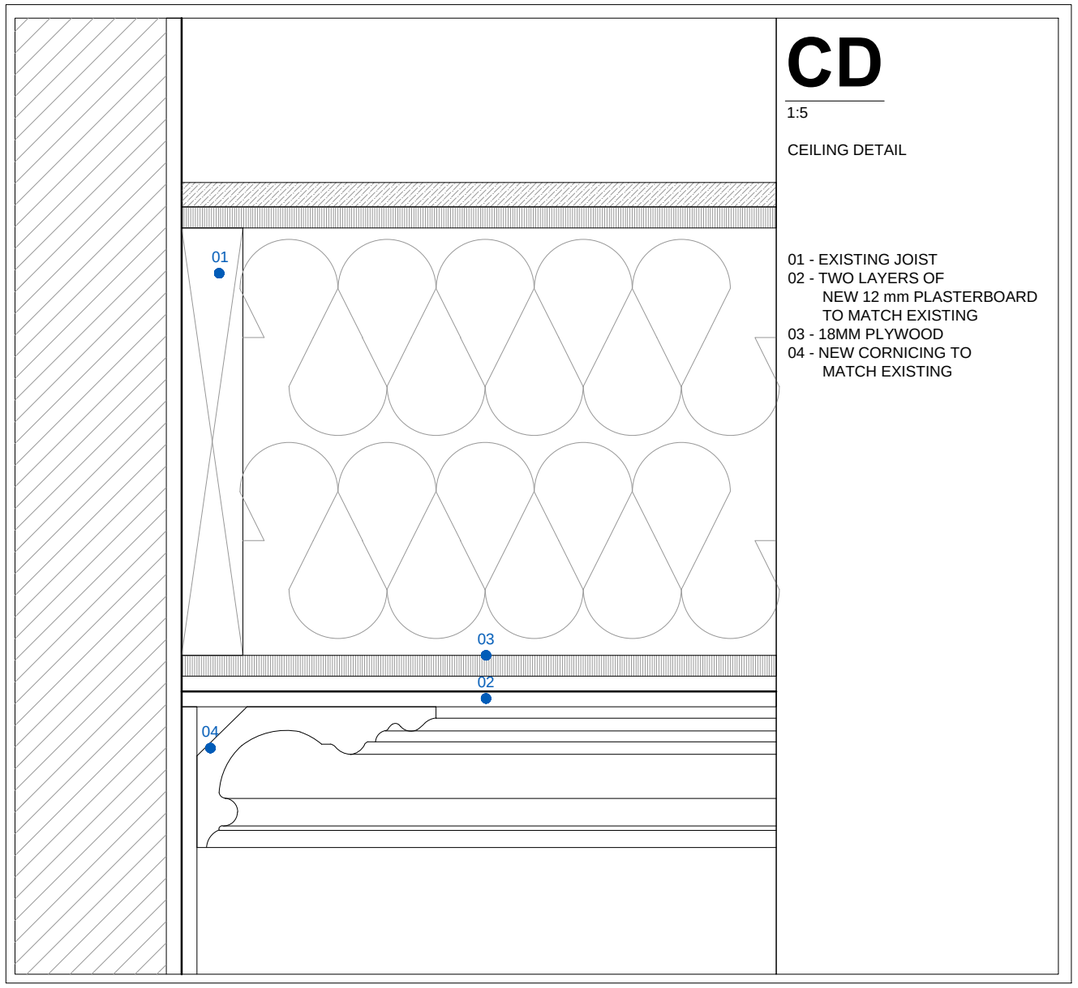

CD

1:5

CEILING DETAIL

01 - EXISTING JOIST
02 - TWO LAYERS OF NEW 12 mm PLASTERBOARD TO MATCH EXISTING
03 - 18MM PLYWOOD
04 - NEW CORNICING TO MATCH EXISTING

LBMV architects

Luigi Montefusco Ltd
27 Elizabeth Mews
NW3 4UH London
T+44 (0) 207 483 3880
info@lbmvarchitects.com
www.lbmvarchitects.com

DRAWINGS STATUS		DRAWN	CHECKED
PLANNING PERMISSION	A3	MC, UG	LM
PROJECT TITLE		DATE	SCALE
PLANNING APPLICATION / LISTED BUILDING CONSENT 06 Lyndhurst Gardens NW3 5NR		12.12.2016	1:5@A3
		DRAWING TITLE	
		DETAILS	
		JOB NO	DRAWING NO
		0050	A4005

GENERAL NOTE

- This drawing should be removed from currency immediately when a revised version is issued.
- All dimensions to be checked on site by the contractor. Discrepancies to be reported before proceeding with the works.
- This drawing is copyrighted.
- All dimensions in mm's.

LEGEND

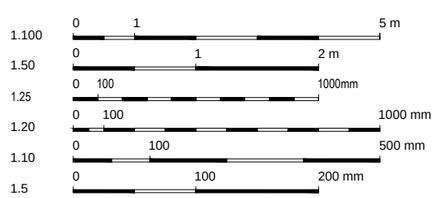

REV	DESCRIPTION	DATE	NAME

TRADITIONAL DOOR DETAILS - DR01

SCALE 1:20

FRAME DETAILS

SCALE 1:5

HEAD SECTION

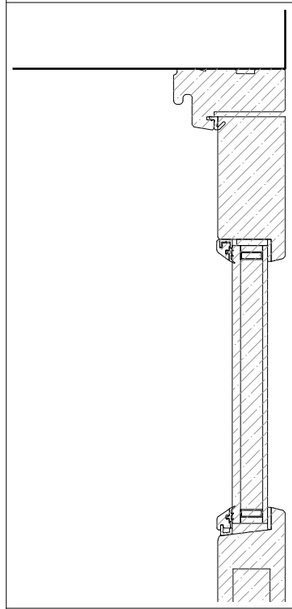

MIDDLE SECTION

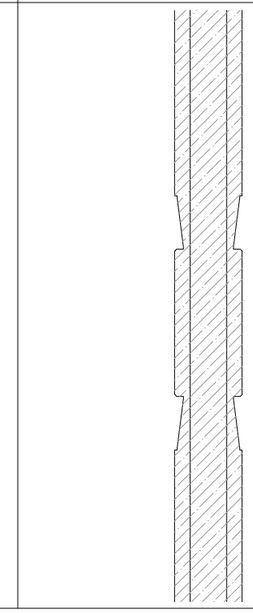

THRESHOLD SECTION

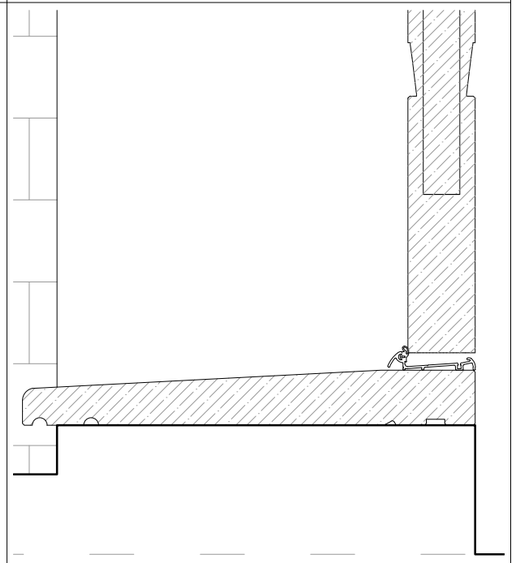

PLAN SECTION

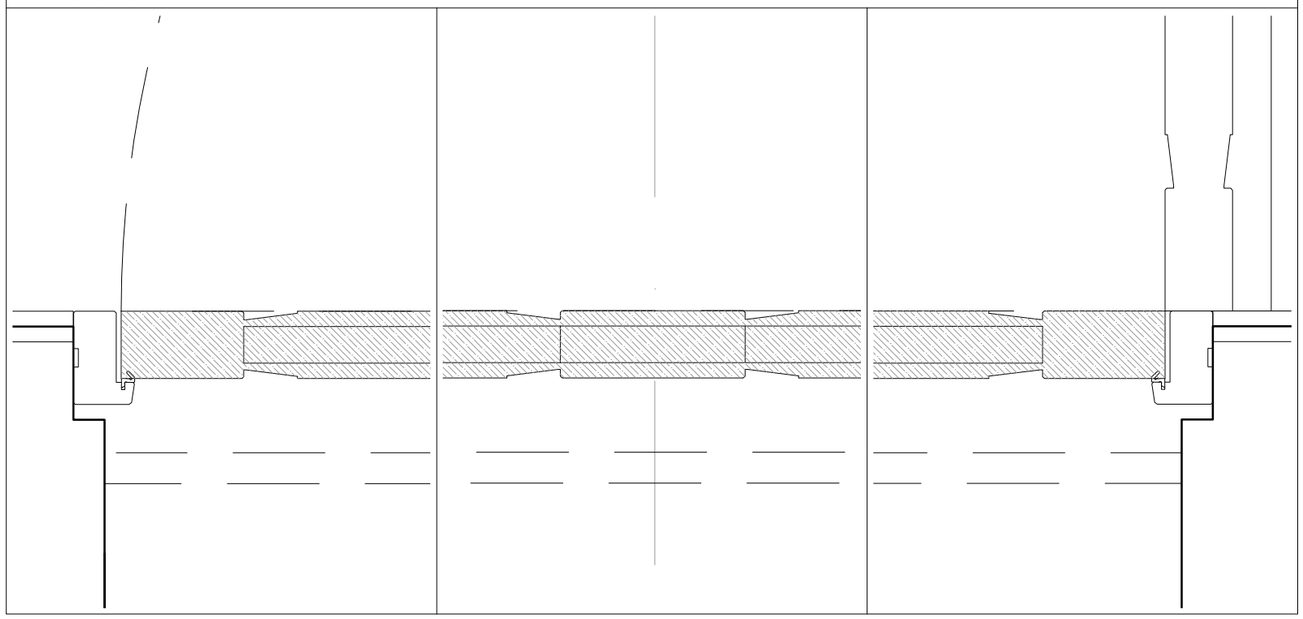

LBMV architects

Luigi Montefusco Ltd
27 Elizabeth Mews
NW3 4UH London
T+44 (0) 207 483 3880
info@lbmvarchitects.com
www.lbmvarchitects.com

DRAWINGS STATUS		DRAWN	CHECKED
PLANNING PERMISSION	A3	MC, UG	LM
PROJECT TITLE		DATE	SCALE
PLANNING APPLICATION / LISTED BUILDING CONSENT 06 Lyndhurst Gardens NW3 5NR		12.12.2016	1:20@A3 1:5@A3
		DRAWING TITLE	
		DETAILS	
		JOB NO	DRAWING NO
		0050	A4006

GENERAL NOTE

- This drawing should be removed from currency immediately when a revised version is issued.
- All dimensions to be checked on site by the contractor. Discrepancies to be reported before proceeding with the works.
- This drawing is copyrighted.
- All dimensions in mm's.

LEGEND

1.100	0	1	5 m
1.50	0	1	2 m
1.25	0	100	1000mm
1.20	0	100	1000 mm
1.10	0	100	500 mm
1.5	0	100	200 mm

REV	DESCRIPTION	DATE	NAME

TRADITIONAL DOOR DETAILS - DR02/DR03/DR04

SCALE 1:20

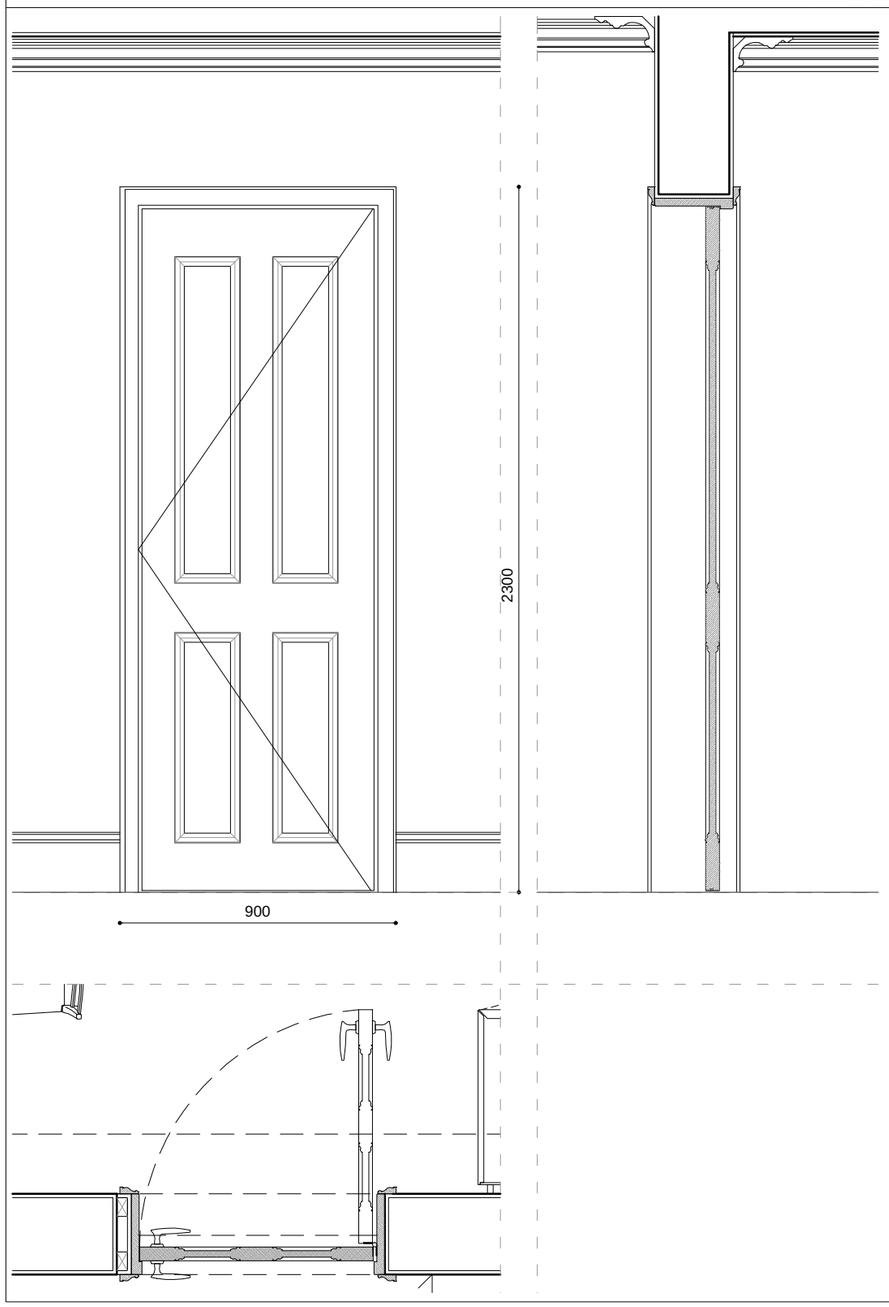

FRAME DETAILS

SCALE 1:5

HEAD SECTION

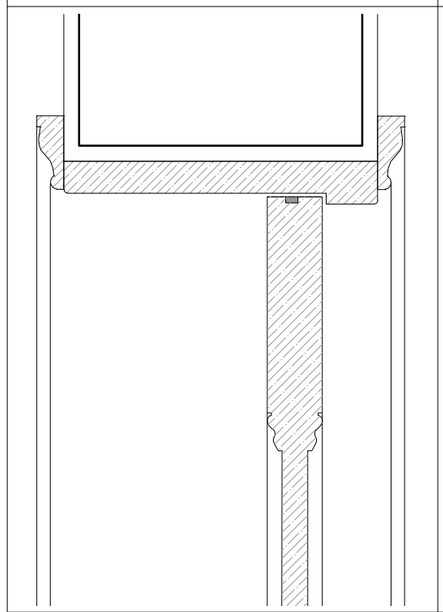

MIDDLE SECTION

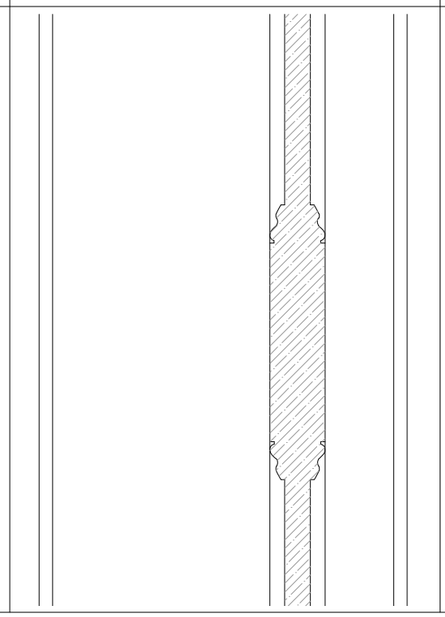

THRESHOLD SECTION

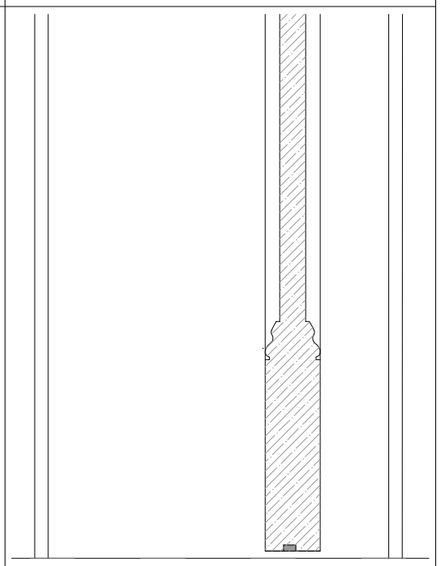

PLAN SECTION

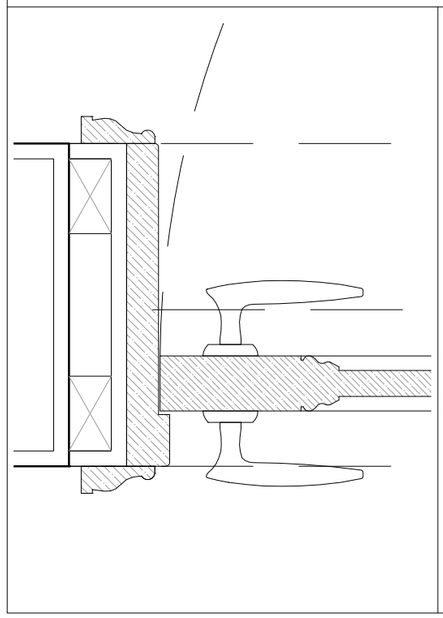

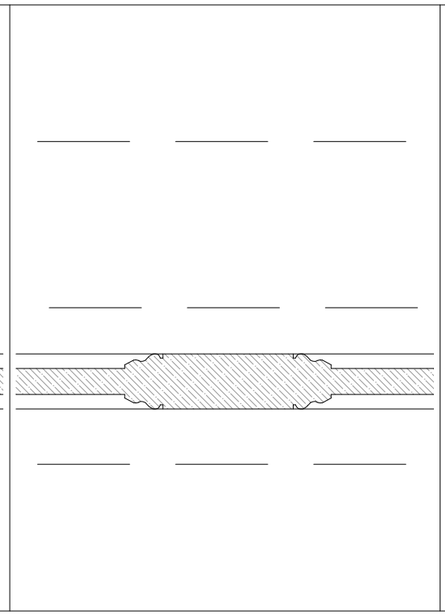

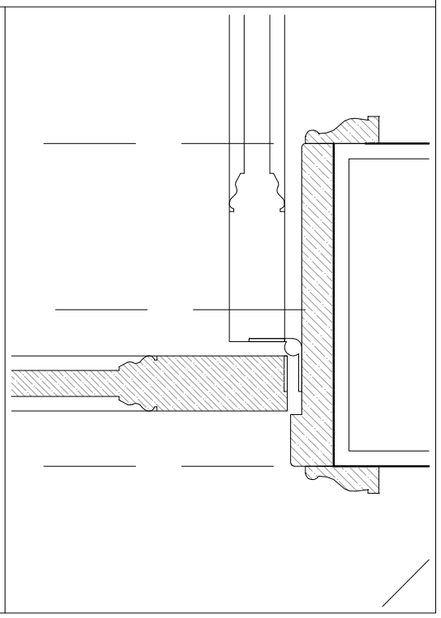

LBMV architects

Luigi Montefusco Ltd
27 Elizabeth Mews
NW3 4UH London
T+44 (0) 207 483 3880
info@lbmvarchitects.com
www.lbmvarchitects.com

DRAWINGS STATUS		DRAWN	CHECKED
PLANNING PERMISSION	A3	MC, UG	LM
PROJECT TITLE		DATE	SCALE
PLANNING APPLICATION / LISTED BUILDING CONSENT 06 Lyndhurst Gardens NW3 5NR		12.12.2016	1:20@A3 1:5@A3
		DRAWING TITLE	
		DETAILS	
		JOB NO	DRAWING NO
		0050	A4007

GENERAL NOTE

- This drawing should be removed from currency immediately when a revised version is issued.
- All dimensions to be checked on site by the contractor. Discrepancies to be reported before proceeding with the works.
- This drawing is copyrighted.
- All dimensions in mm's.

LEGEND

1.100	0	1	5 m
1.50	0	1	2 m
1.25	0	100	1000mm
1.20	0	100	1000 mm
1.10	0	100	500 mm
1.5	0	100	200 mm

REV	DESCRIPTION	DATE	NAME

TRADITIONAL DOOR DETAILS - DR05

SCALE 1:20

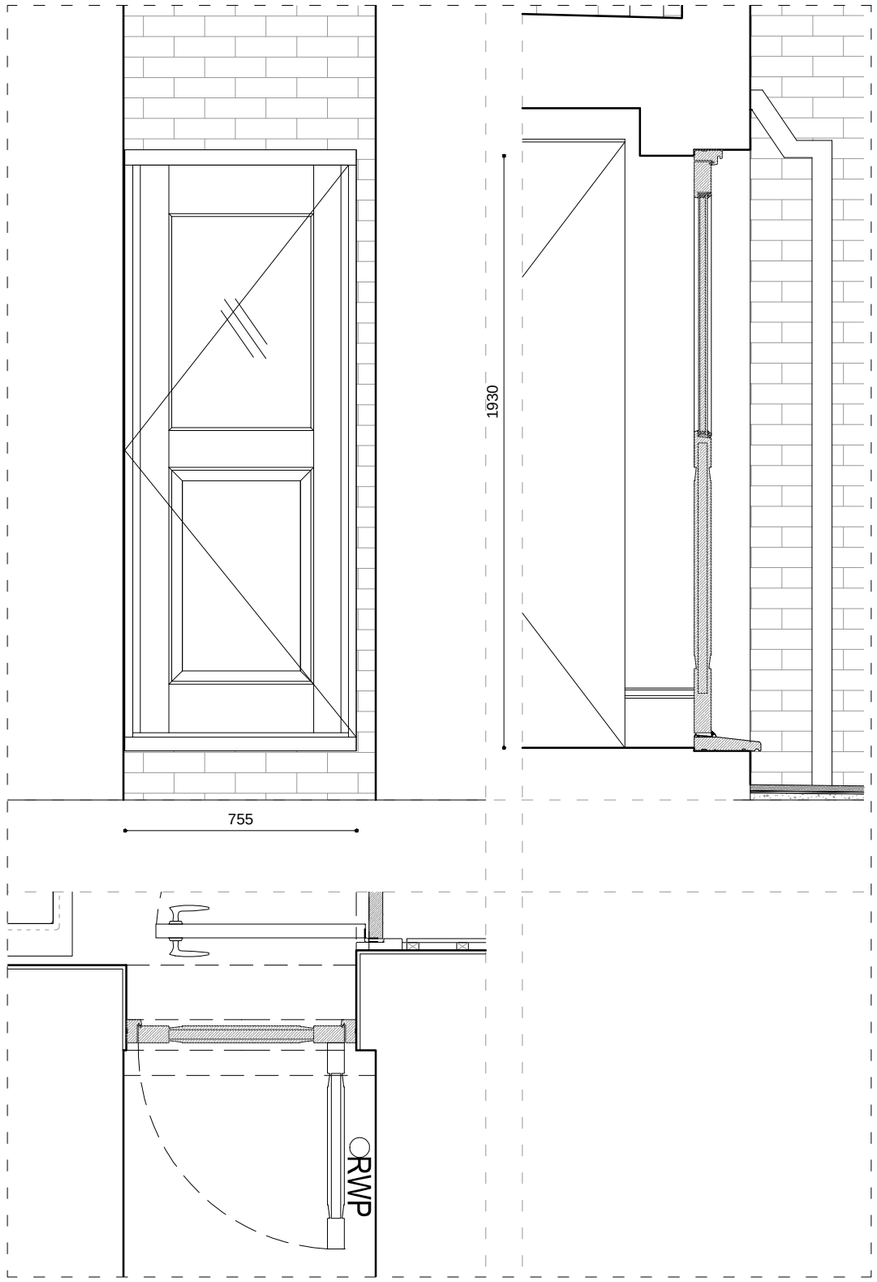

FRAME DETAILS

SCALE 1:5

HEAD SECTION

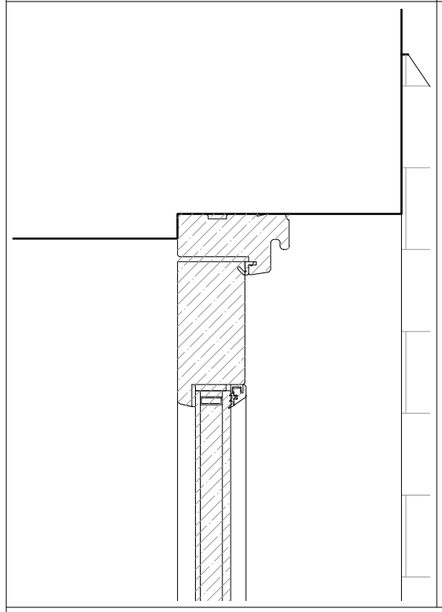

MIDDLE SECTION

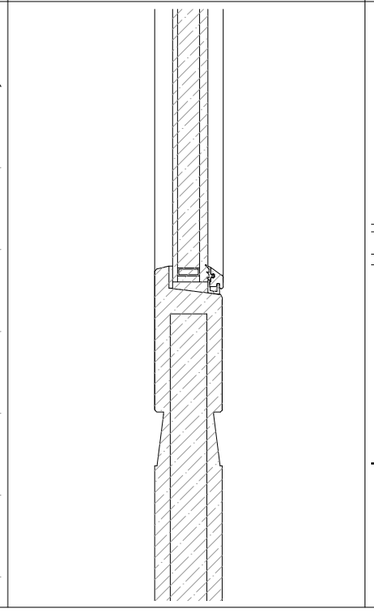

THRESHOLD SECTION

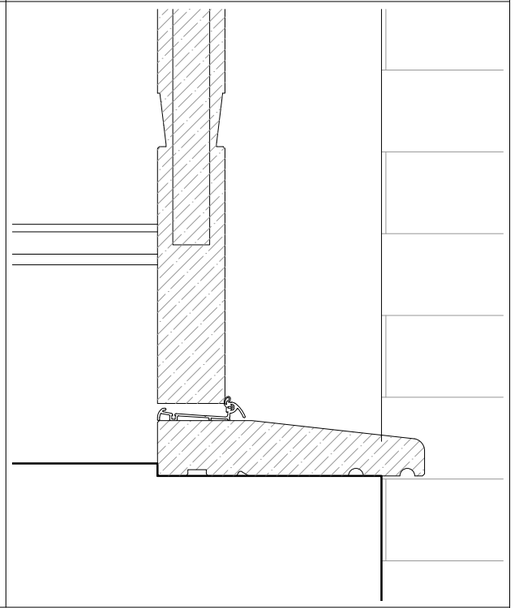

PLAN SECTION

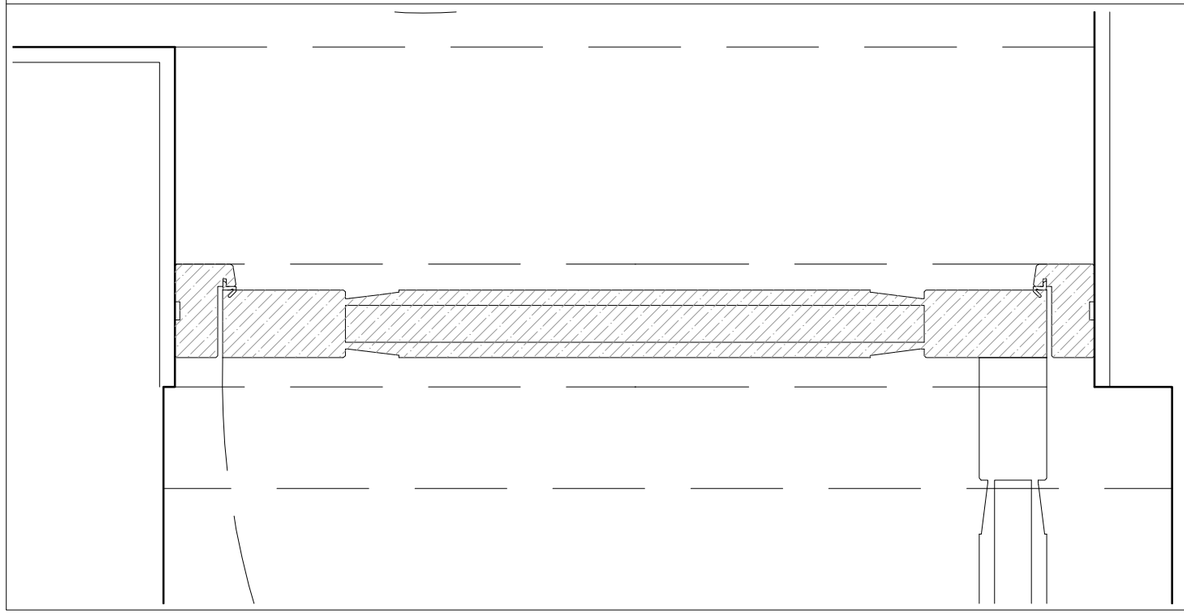

LBMV architects

Luigi Montefusco Ltd
27 Elizabeth Mews
NW3 4UH London
T+44 (0) 207 483 3880
info@lbmvarchitects.com
www.lbmvarchitects.com

DRAWINGS STATUS		DRAWN	CHECKED
PLANNING PERMISSION	A3	MC, UG	LM
PROJECT TITLE		DATE	SCALE
PLANNING APPLICATION / LISTED BUILDING CONSENT 06 Lyndhurst Gardens NW3 5NR		12.12.2016	1:20@A3 1:5@A3
		DRAWING TITLE	
		DETAILS	
		JOB NO	DRAWING NO
		0050	A4008

GENERAL NOTE

- This drawing should be removed from currency immediately when a revised version is issued.
- All dimensions to be checked on site by the contractor. Discrepancies to be reported before proceeding with the works.
- This drawing is copyrighted.
- All dimensions in mm's.

LEGEND

1.100	0	1	5 m
1.50	0	1	2 m
1.25	0	100	1000mm
1.20	0	100	1000 mm
1.10	0	100	500 mm
1.5	0	100	200 mm

REV	DESCRIPTION	DATE	NAME

EXISTING TRADITIONAL WINDOWS DETAIL - WD 3 / 4 / 5 / 6 / 7 / 8 / 9 / 10 / 11

SCALE 1:20

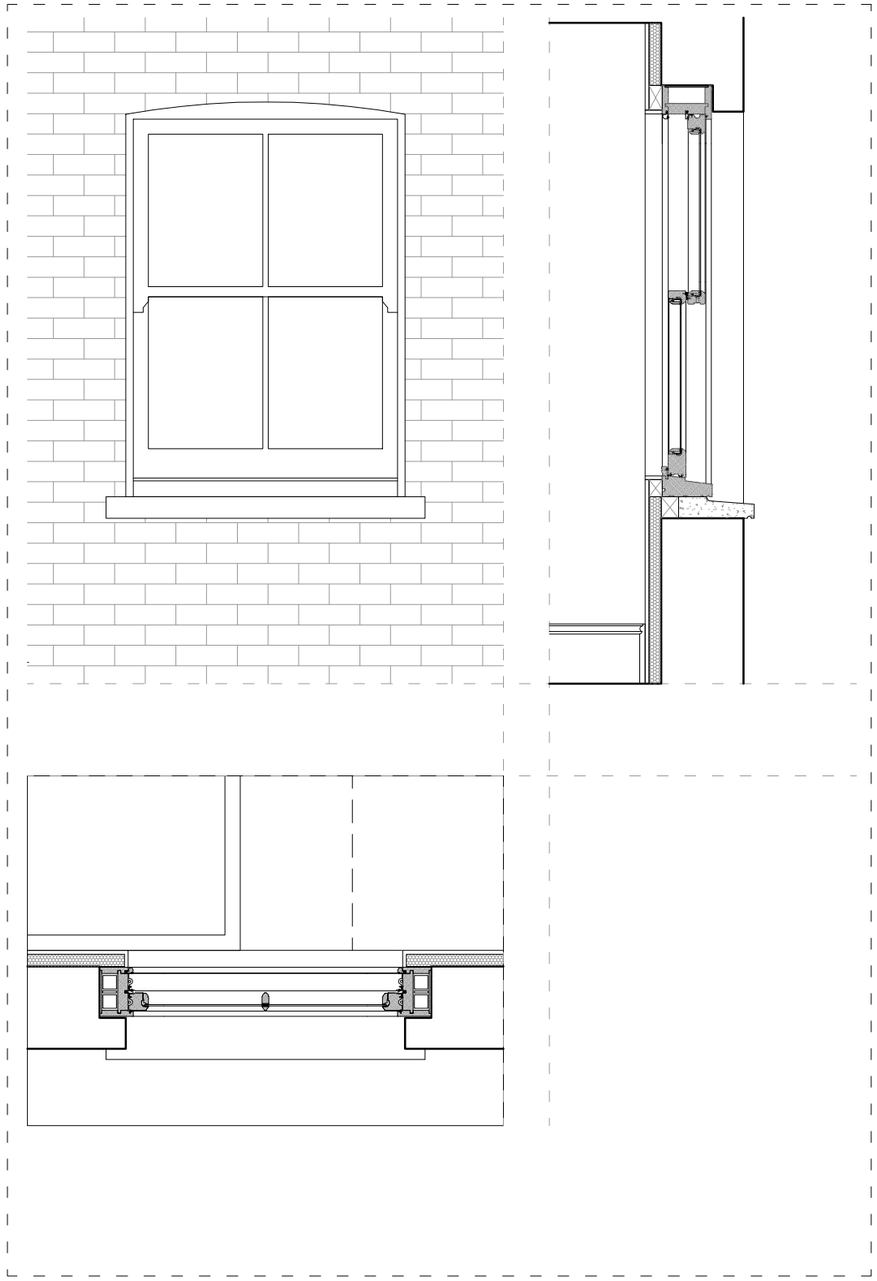

FRAME DETAILS

SCALE 1:5

HEAD SECTION

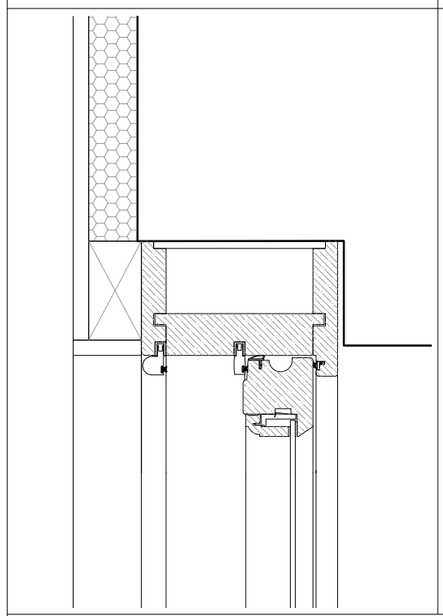

MIDDLE SECTION

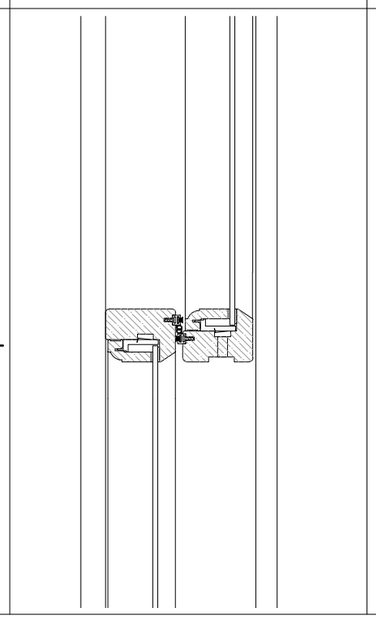

THRESHOLD SECTION

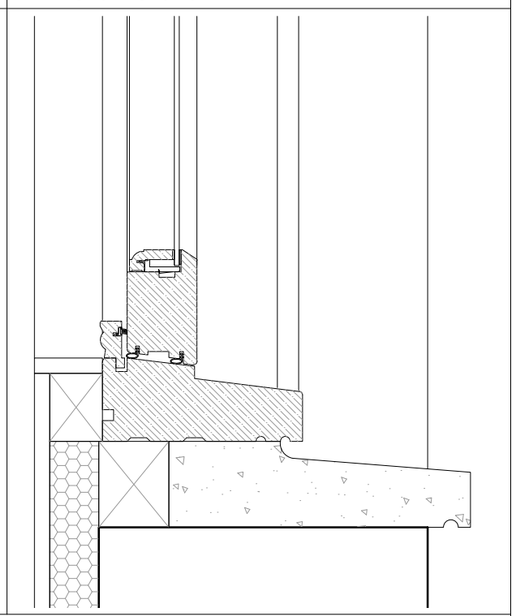

PLAN SECTION

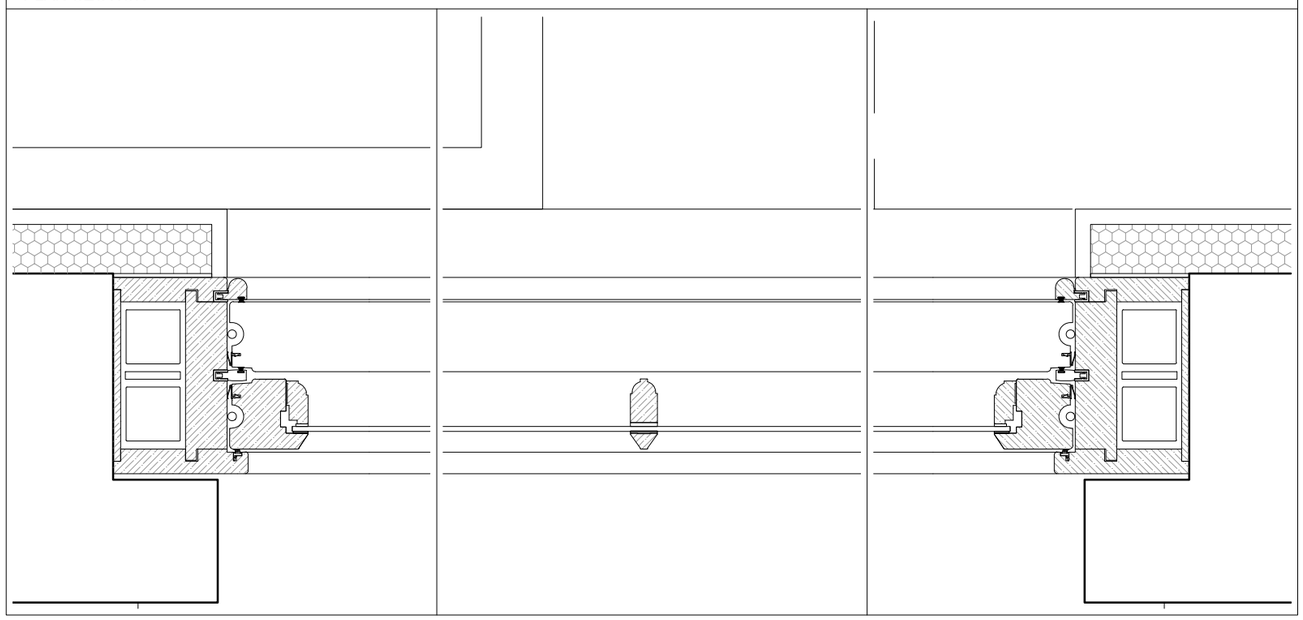

LBMV architects

Luigi Montefusco Ltd
27 Elizabeth Mews
NW3 4UH London
T+44 (0) 207 483 3880
info@lbmvarchitects.com
www.lbmvarchitects.com

DRAWINGS STATUS		DRAWN	CHECKED
PLANNING PERMISSION	A3	MC, UG	LM
PROJECT TITLE		DATE	SCALE
PLANNING APPLICATION / LISTED BUILDING CONSENT 06 Lyndhurst Gardens NW3 5NR		12.12.2016	1:20@A3 1:5@A3
		DRAWING TITLE	
		DETAILS	
		JOB NO	DRAWING NO
		0050	A4009

GENERAL NOTE

- This drawing should be removed from currency immediately when a revised version is issued.
- All dimensions to be checked on site by the contractor. Discrepancies to be reported before proceeding with the works.
- This drawing is copyrighted.
- All dimensions in mm's.

LEGEND

1.100	0	1	5 m
1.50	0	1	2 m
1.25	0	100	1000mm
1.20	0	100	1000 mm
1.10	0	100	500 mm
1.5	0	100	200 mm

REV	DESCRIPTION	DATE	NAME

PROPOSED TRADITIONAL WINDOWS DETAIL - WD 3 / 4 / 5 / 6 / 7 / 8 / 9 / 10 / 11

SCALE 1:20

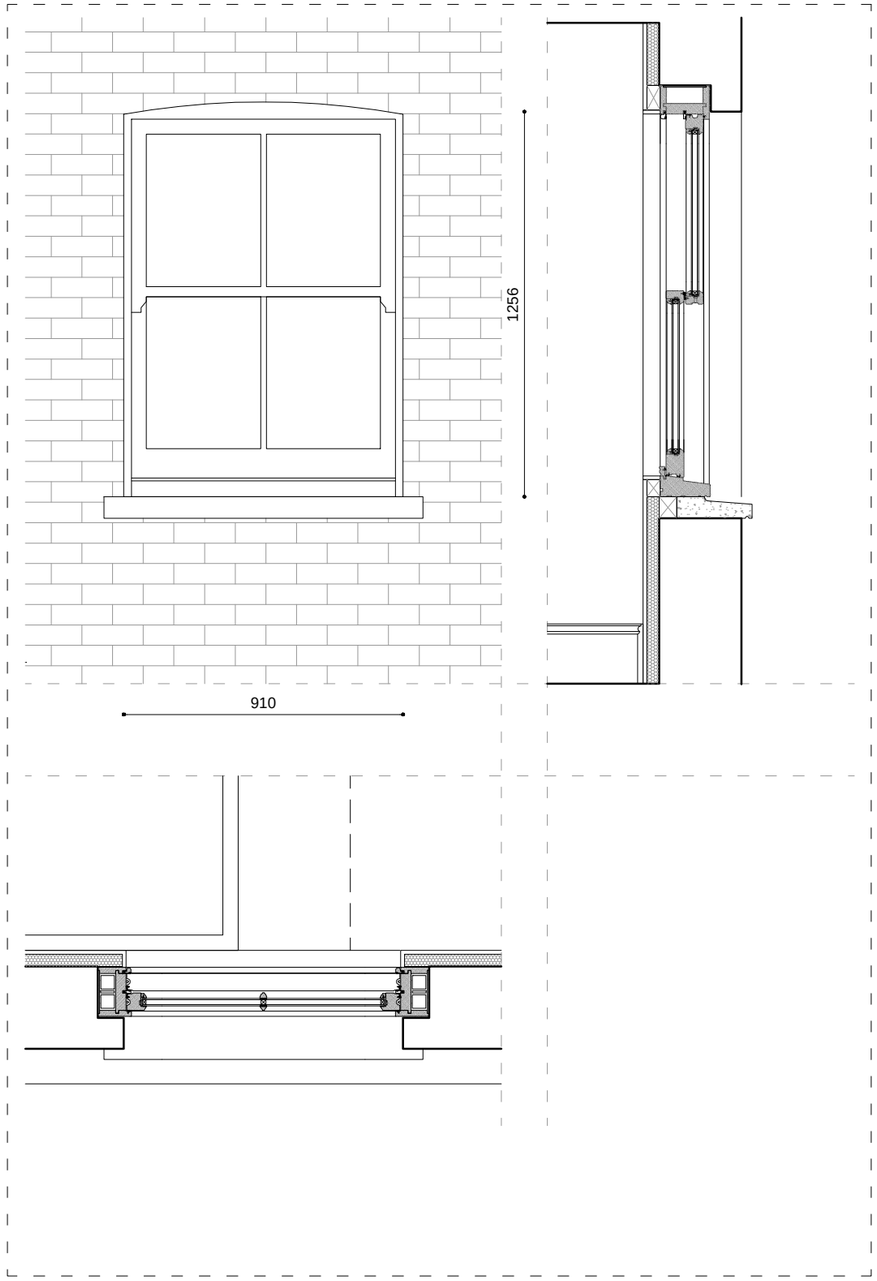

FRAME DETAILS

SCALE 1:5

HEAD SECTION

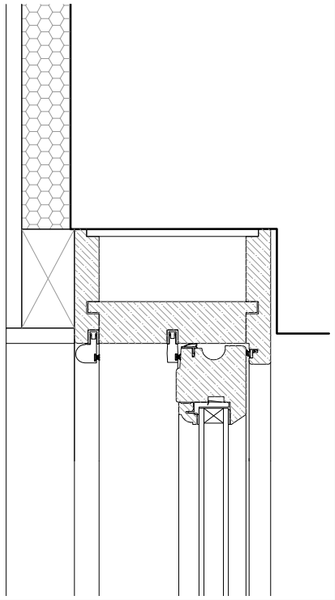

MIDDLE SECTION

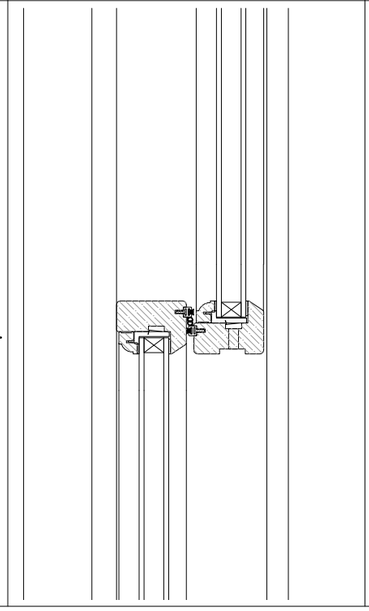

THRESHOLD SECTION

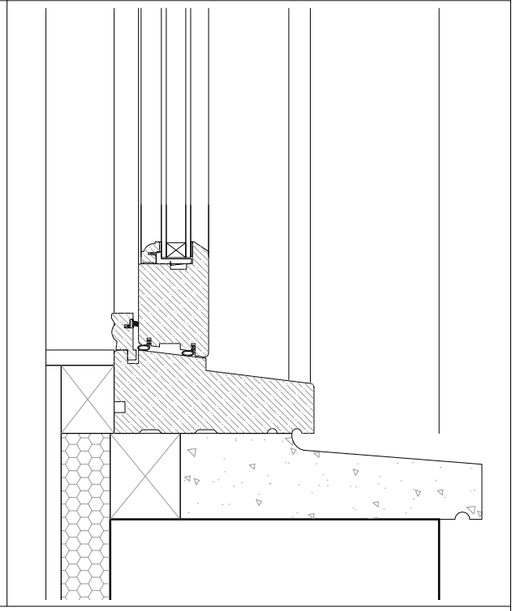

PLAN SECTION

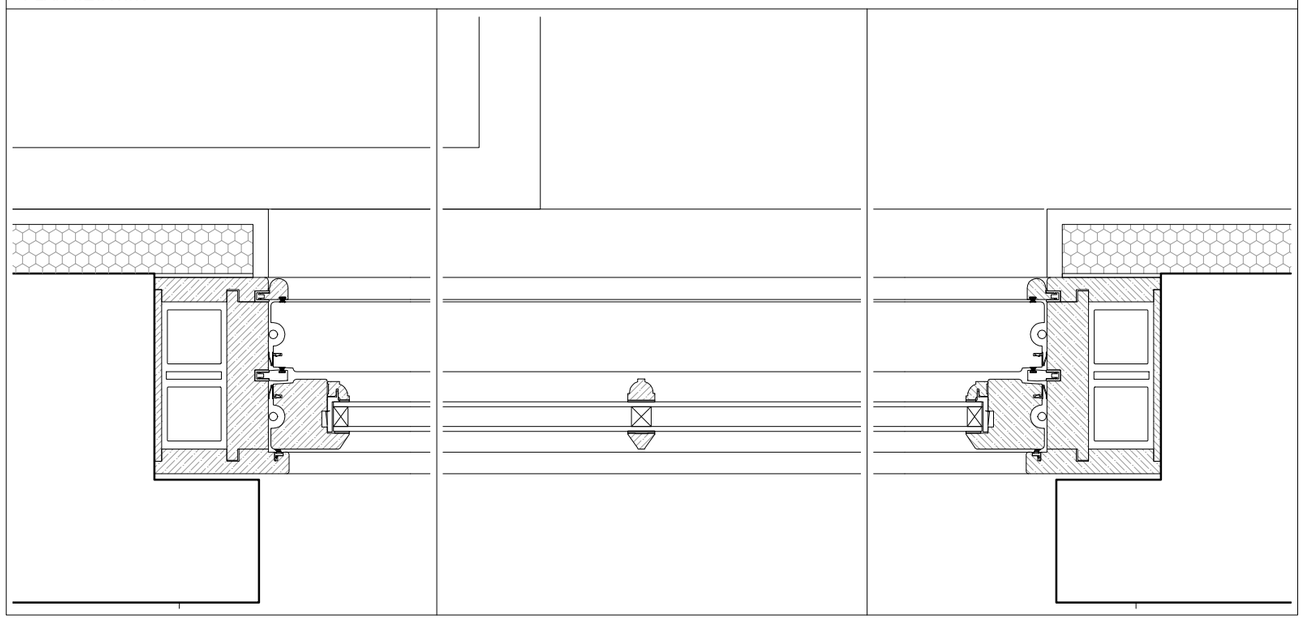

LBMV architects

Luigi Montefusco Ltd
27 Elizabeth Mews
NW3 4UH London
T+44 (0) 207 483 3880
info@lbmvarchitects.com
www.lbmvarchitects.com

DRAWINGS STATUS		DRAWN	CHECKED
PLANNING PERMISSION	A3	MC, UG	LM
PROJECT TITLE		DATE	SCALE
PLANNING APPLICATION / LISTED BUILDING CONSENT 06 Lyndhurst Gardens NW3 5NR		12.12.2016	1:20@A3 1:5@A3
		DRAWING TITLE	
		DETAILS	
		JOB NO	DRAWING NO
		0050	A4010

GENERAL NOTE

- This drawing should be removed from currency immediately when a revised version is issued.
- All dimensions to be checked on site by the contractor. Discrepancies to be reported before proceeding with the works.
- This drawing is copyrighted.
- All dimensions in mm's.

LEGEND

1.100	0	1	5 m
1.50	0	1	2 m
1.25	0	100	1000mm
1.20	0	100	1000 mm
1.10	0	100	500 mm
1.5	0	100	200 mm

REV	DESCRIPTION	DATE	NAME