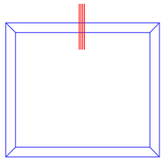

SECTION - TOP

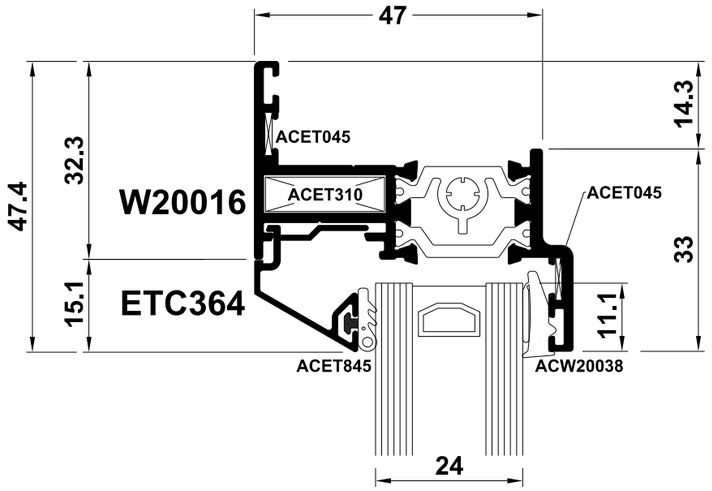

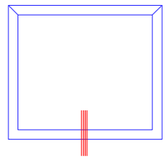

SECTION - CILL

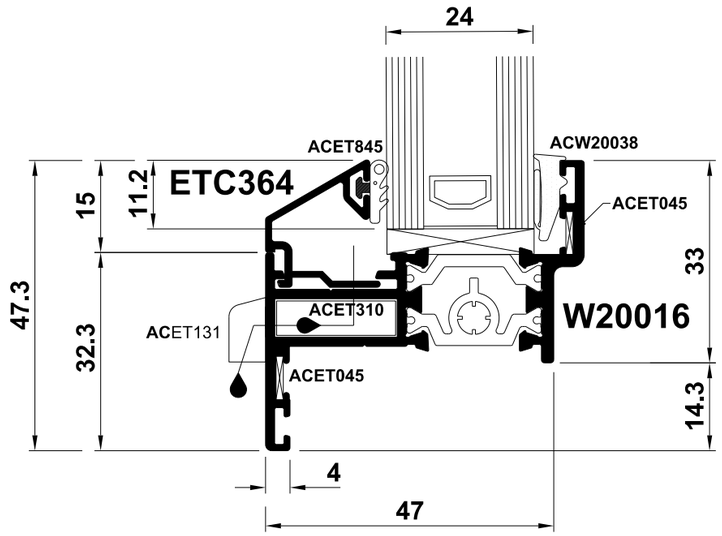

Y2214F
Anodic Bronze

FINISH BRONZE

MOXY & CO STUDIO LTD
Director: Hannah Darby RIBA ARB

T: +44 79760 75595
hannah@moxyandco.com

57 Longhurst Rd
SE13 5NA

LONDON

ALL DIMENSIONS & CONDITIONS ARE TO BE CHECKED ON SITE PRIOR TO PREPARING DRAWINGS OR COMMENCING ANY WORK

Do not scale for building control or construction purposes. May be scaled for planning purposes

All dimensions in millimetres unless otherwise stated.

Any variations or supplementary drawings are to be approved by the Architect

IF IN DOUBT ASK

Magnetic media does not constitute contract documentation and update of this data will occur. These files are current as of the date of issue. Your use of the content of these files is at your own risk. Reference should always be made to the hard copy which is superior to the digital format.
Any documents produced by yourselves which contain part or all of this data remains your responsibility and is attributed to yourselves. Whilst every effort has been made to ensure that this file has been scanned for viruses, we cannot ensure that it does not contain any.

Client
ADAM DRAPER

Status
FOR INFORMATION

Local Authority
Camden Council

CAD Drawn | Checked

Date | Revision

Project
SITE ADJOINING
33 HOLMDALE ROAD,
NW6 1BJ

Job Number: 16-012
Drawing Number: 32-100
Scale: 1:5@A3
Date: JULY 2016

Drawing Description
WINDOW DETAILS - SLIM FRAMES HERITAGE RANGE

Revision