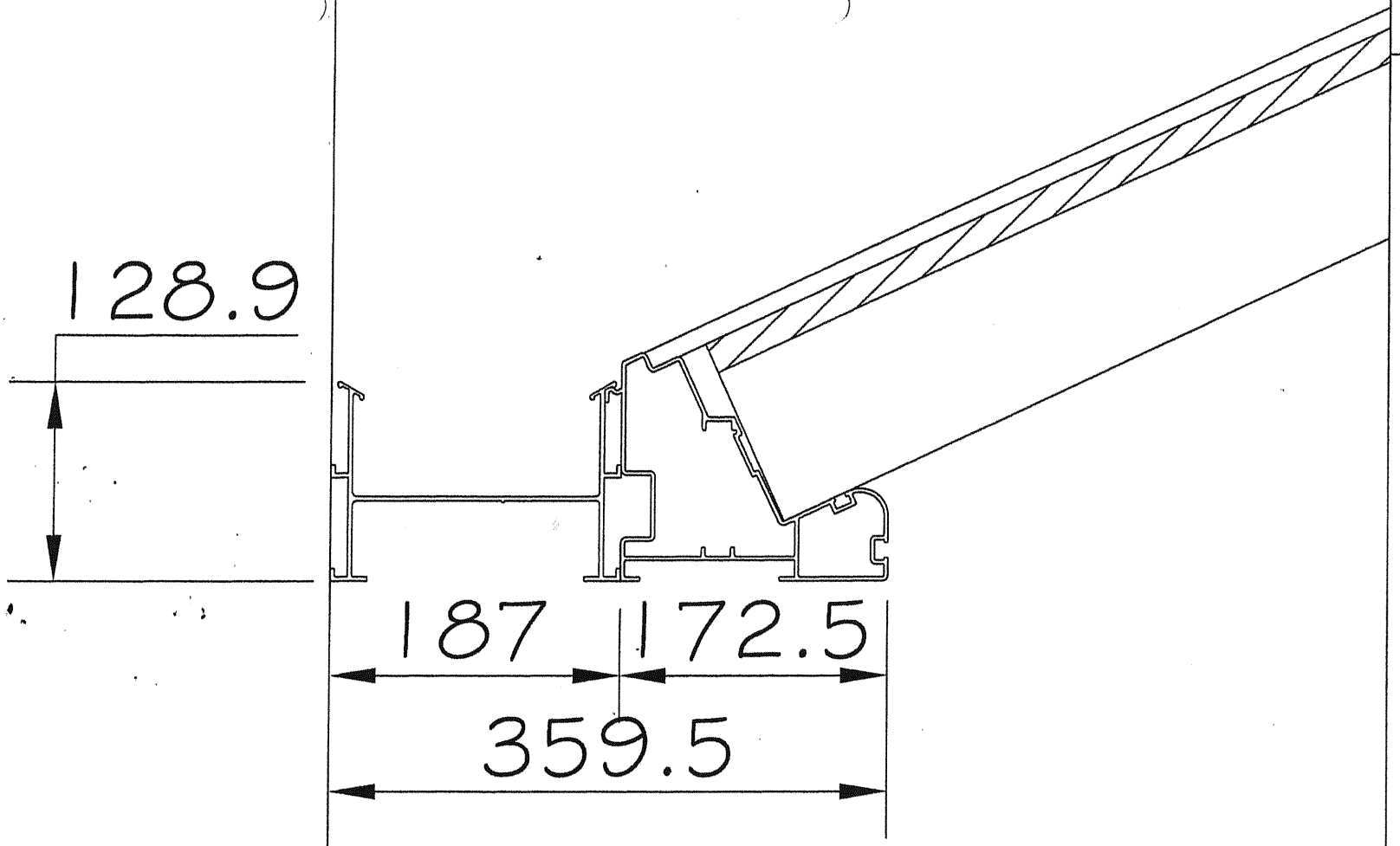

Rev	Date	Details	Initial

Customer	Reference No
INSERT CUSTOMER	INSERT NUMBER

Date	Drawn By	Drawing Title	Scale (A4)	Customer Reference	Revision
Date	MARK	CROSS SECTION	NTS	INSERT CUST REF	INSERT REV

DFS No. 34 MT/04