NOTES:

- STAIR TO ALLOW FOR THE FUTURE INSTALLATION OF BS APPROVED STAIRLIFT
- STAIR TO COMPLY WITH LIFETIME HOMES REQUIREMENTS
- MINIMUM CLEAR STAIR WIDTH 900mm MEASURED 450mm ABOVE PITCH LINE
- MINIMUM HEADROOM ABOVE PITCH LINE 2000mm
- STAIRCASE TO EMPLOYERS CHOICE
- ARRANGEMENT OF STRUCTURAL SUPPORT OF STAIR BY BUILDING TIMBER FRAME TBC BY SPECIALIST STAIR AND TIMBER FRAME SUPPLIERS
- FULL-HEIGHT POSTS MAY BE REQUIRED TO SUPPORT STAIR CORNER LANDINGS - REFER TO SPECIALIST SUPPLIER DETAILS
- ACOUSTIC CONSULTANT TO CONFIRM SUFFICIENCY OF STAIR WALKING SURFACE TREATMENT WITH TIMBER STAIR CONSTRUCTION

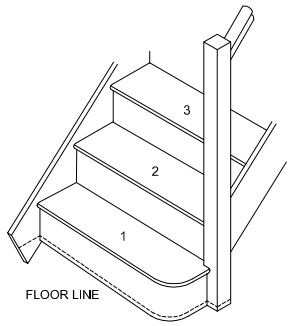

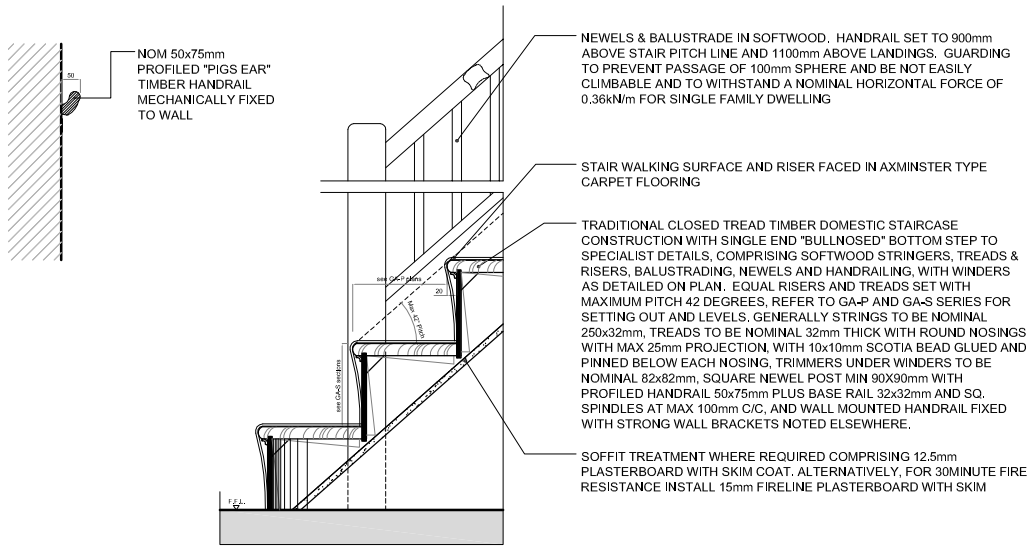

Example location: (L00 & L01 GL 02)
DETAIL - Block B2 - D-J-WT-501 - Foot of internal timber stairs

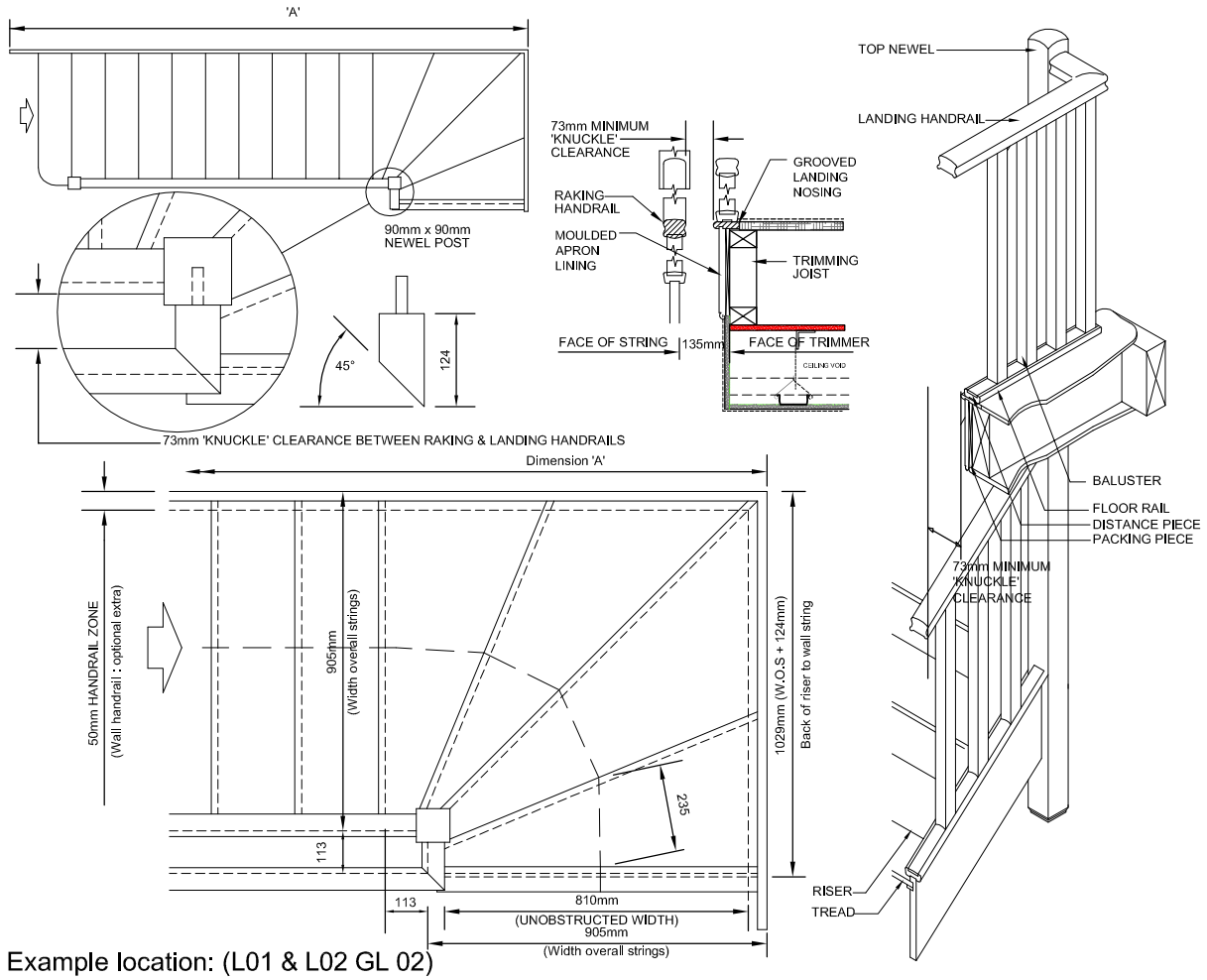

Example location: (L01 & L02 GL 02)
DETAIL - Block B2 - D-J-WT-502 - Parallel landing return of internal timber stairs

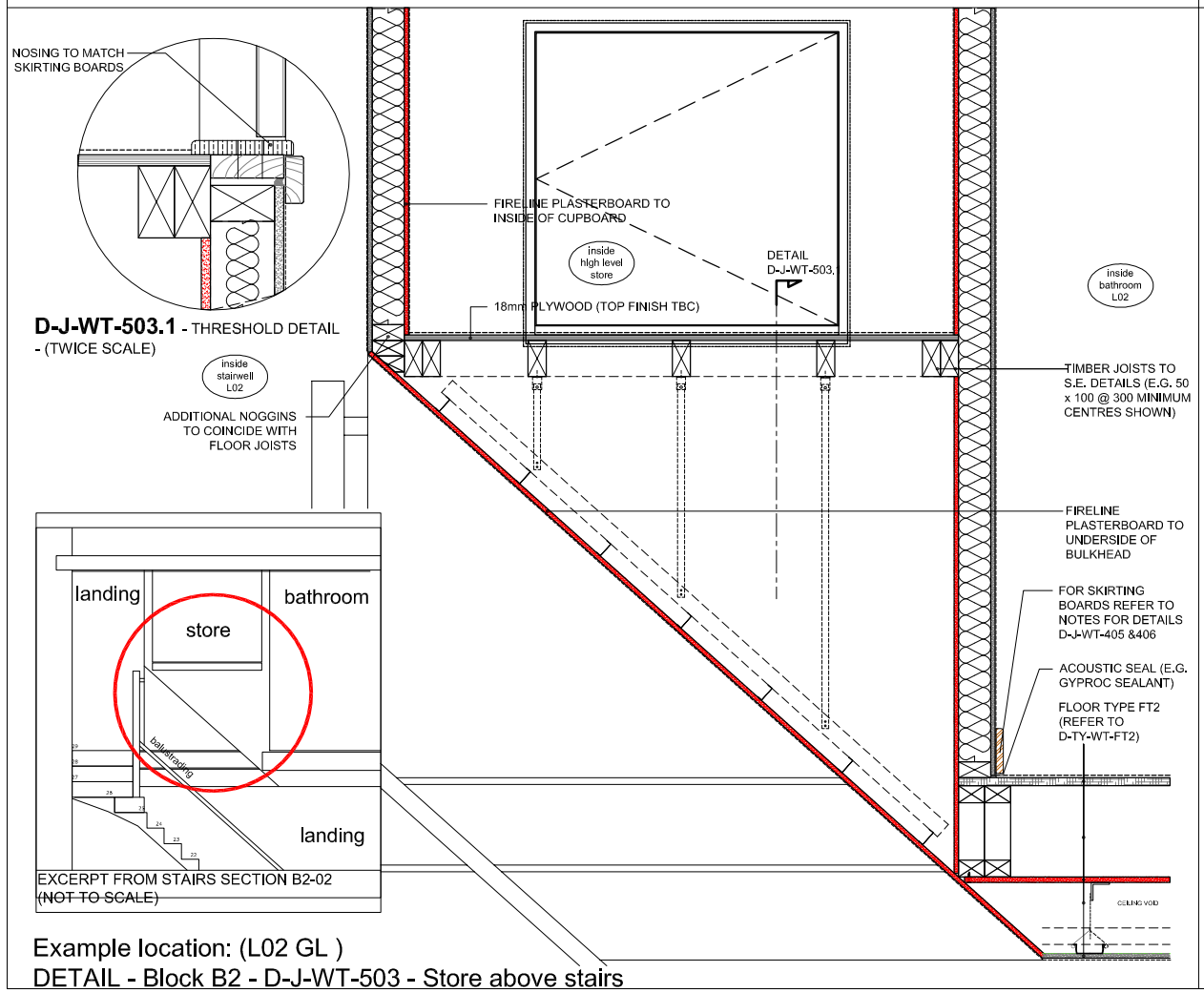

Example location: (L02 GL)
DETAIL - Block B2 - D-J-WT-503 - Store above stairs

NOT USED

Rydon
ALAN CAMP ARCHITECTS
Alan Camp Architects LLP., 88 Union Street, London, SE1 0NW
tel: 020 7593 1000, fax 020 7593 1001, mail@alancamp.com

job	drawn:	date:
BACTON LOW RISE LONDON NW5	DWW	06.16
drawing TYPICAL JUNCTION DETAILS INTERNAL STAIRS DETAILS 501 TO 504	scale: 1 :10 @ A1 1 : 20 @ A3	job no: 1952
note: all dimensions to be checked on site prior to commencement of the work. if this drawing exceeds the quantities in any contract, the architects are to be informed before the work is commenced. for all general purposes other than planning application purposes do not scale, use dimensions, this drawing is subject .	drawing no. D-J-WT- 501 to 504	rev. as below

CONSTRUCTION

revisions

rev.	date	description	Issued by	checked by
C1	03.06.16	First issue for CONSTRUCTION	DWW	RR