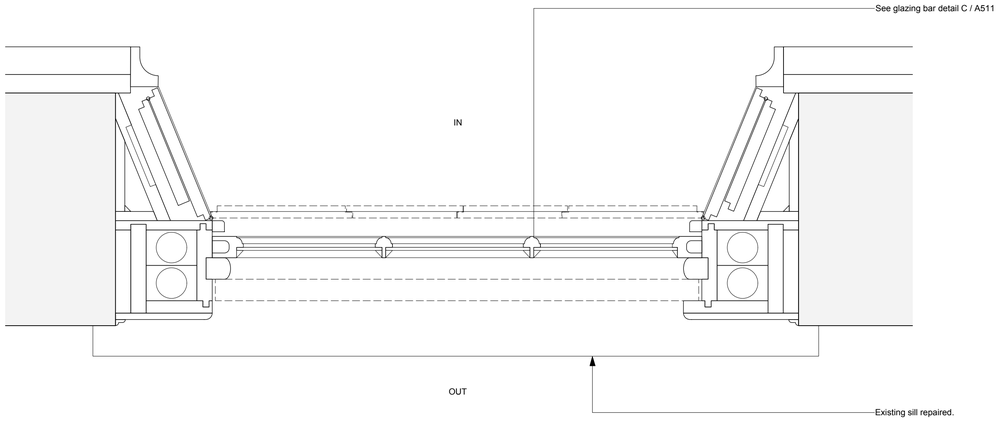

A Plan Detail - Typical First Floor Window
1:5 @ A1

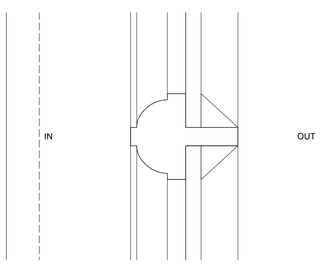

B Section Detail - Typical Glazing Bar
1:1 @ A1

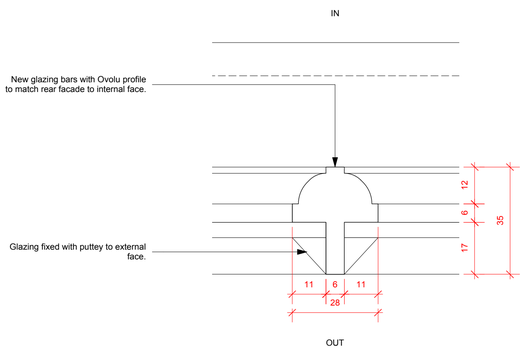

C Plan Detail - Typical Glazing Bar
1:1 @ A1

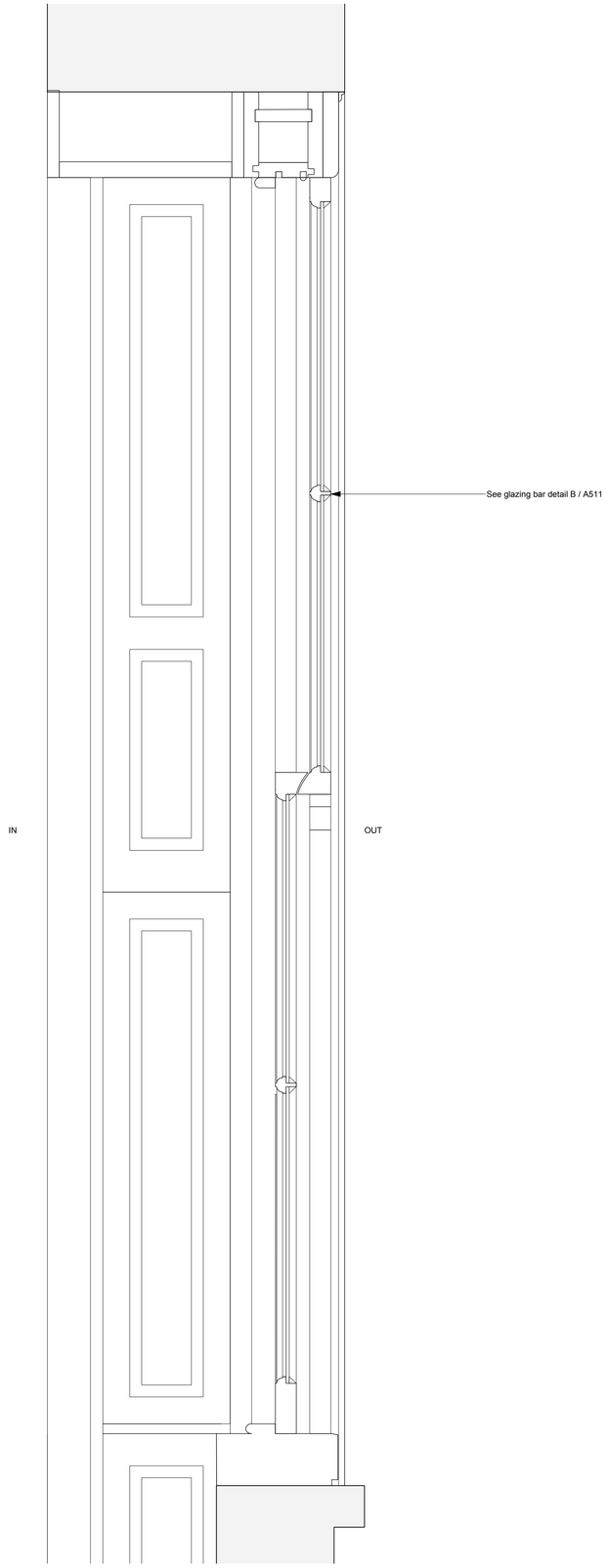

D Section Detail - Typical First Floor Window
1:5 @ A1

36 Great James St

REV	DATE (dd.mm.yyyy)	DESCRIPTION
-	10.05.2016	Planning Issue

DO NOT SCALE FROM THIS DRAWING. ALL DIMENSIONS ARE TO BE CHECKED ON SITE. ALL OMISSIONS AND DISCREPANCIES TO BE REPORTED TO THE ARCHITECT IMMEDIATELY. THIS DRAWING IS TO BE READ IN CONJUNCTION WITH ALL CONSULTANTS INFORMATION. QUINN ARCHITECTS LTD RETAIN COPYRIGHT OF ALL INFORMATION IN THIS DRAWING.

KEY PLAN

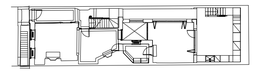

Name	

Notes

Quinn Architects
Rochelle School Arnold Circus London E2 7ES
+44 (0)20 7613 3843 www.quinnuk.com

DRAWING TITLE
Window Details - East (Street)

SCALE	DRAWN BY
1:5 & 1:1 @ A1 / 1:10 & 1:2 @ A3	NF
DATE: MAY 2016	CHECKED BY: LQ

DRAWING STATUS: TENDER

PROJECT NO.	DRAWING NO.	REV.
QA149	A511	-