Notes:

ALLFORD HALL MONAGHAN MORRIS

ARCHITECTS Ltd
5-23 OLD STREET
LONDON
EC1V 9HL
TEL 020 7251 5261
FAX 020 7251 5123
WEB WWW.AHMM.CO.UK

REV	DATE	DESCRIPTION
T 0 1	26/06/15	Stage E Tender Issue
T 0 2	18/12/15	Issued for ER's

Project Name:	CAMDEN LOCK VILLAGE
Drawing Number:	C1_(31)_ 9014
Status:	ER issue
Date:	26/06/15
Rev:	T02

C1 CURTAIN WALLING TYPES SHEET 04

CW_C1.16

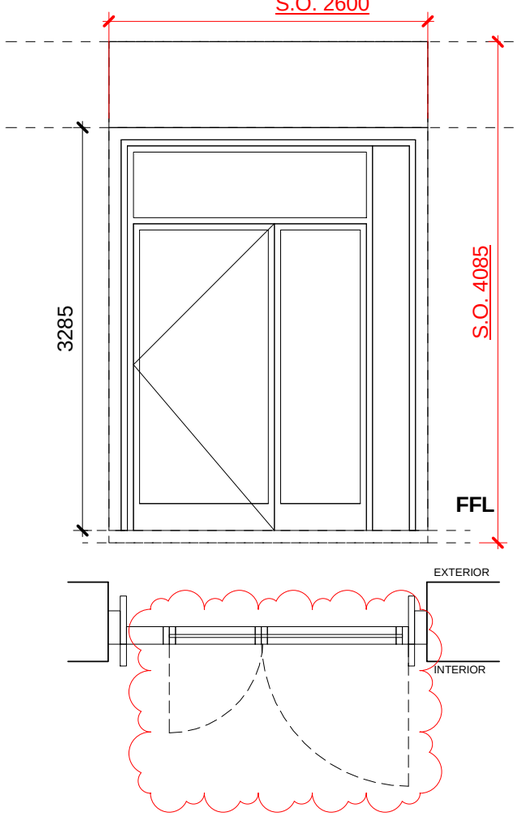

Door swings ammended

CW_C1.17

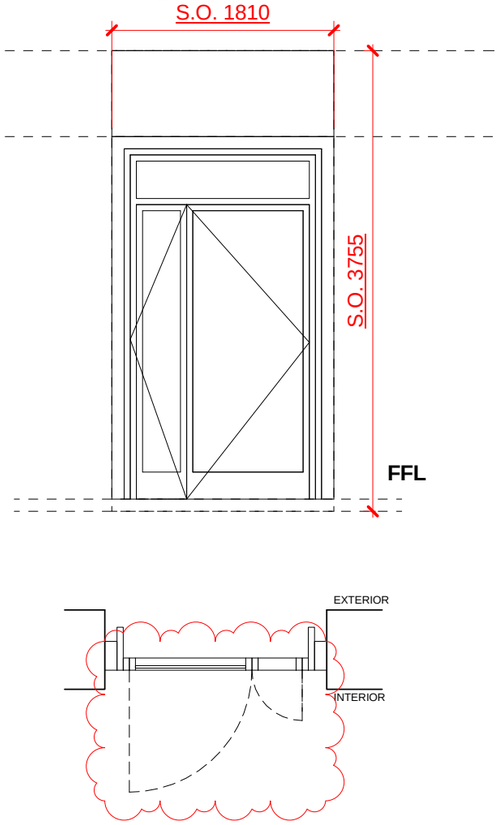

CW_C1.18

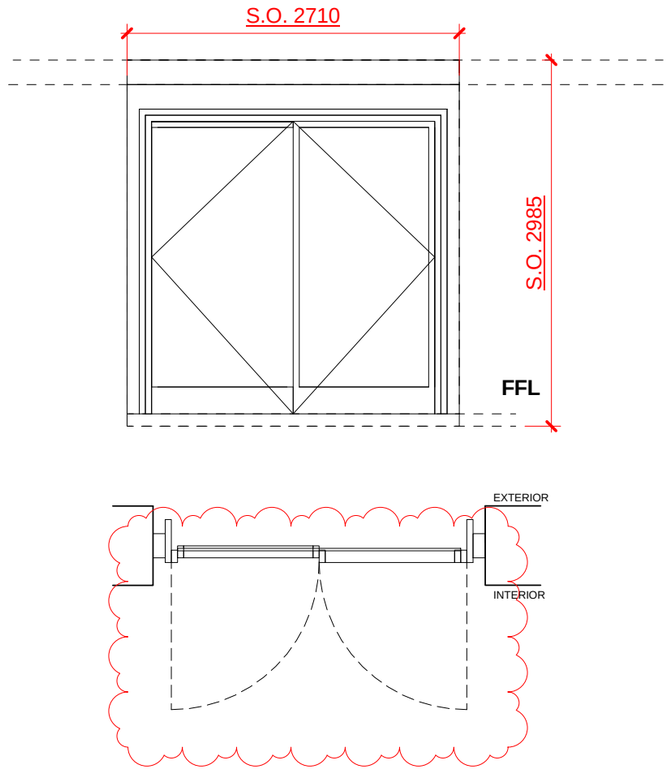

Door swings ammended