SPIRAL BALANCE , SECTION DETAIL

SCALE 1:2

Return to main elevation page

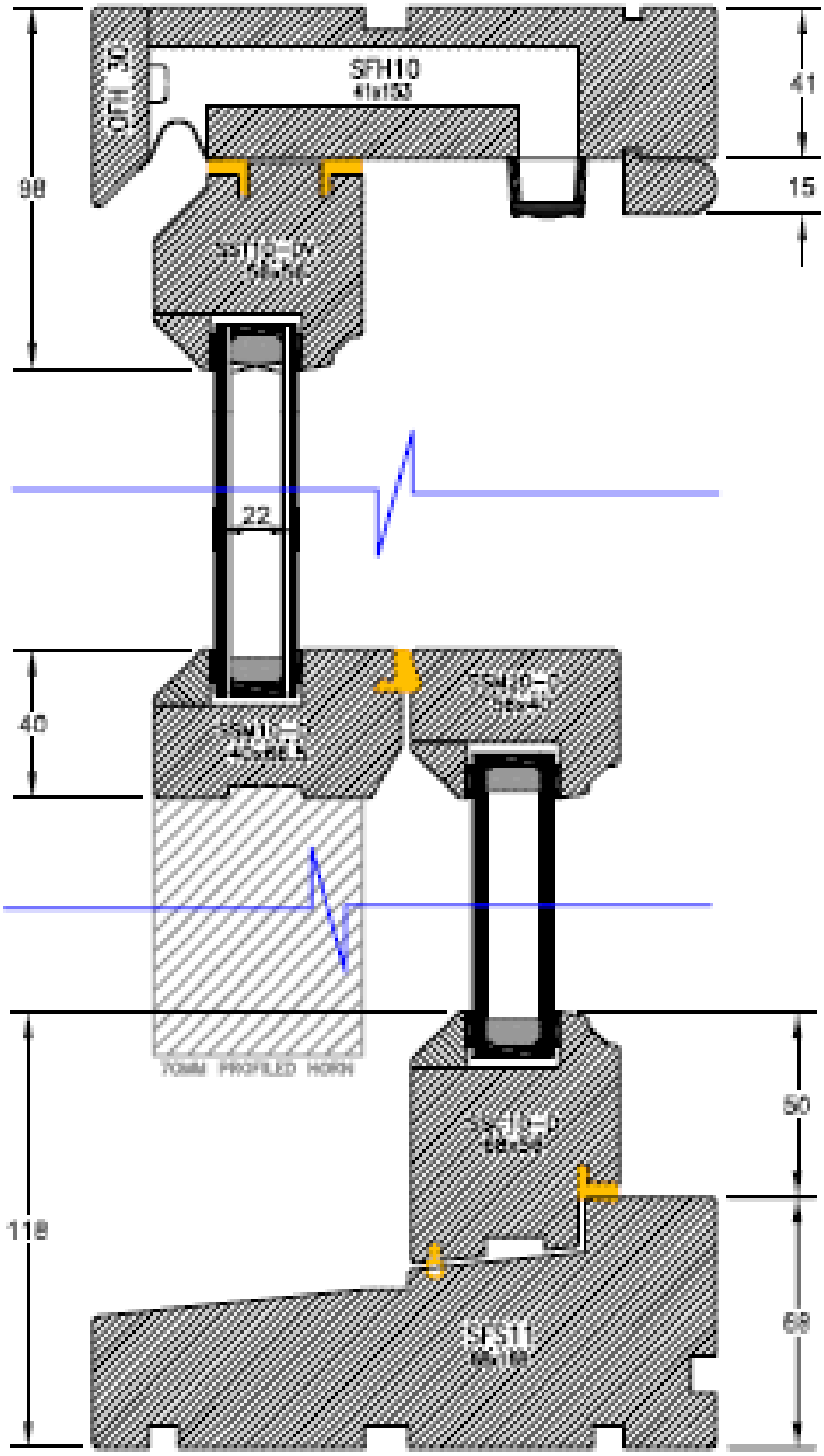

Vertical Section Through