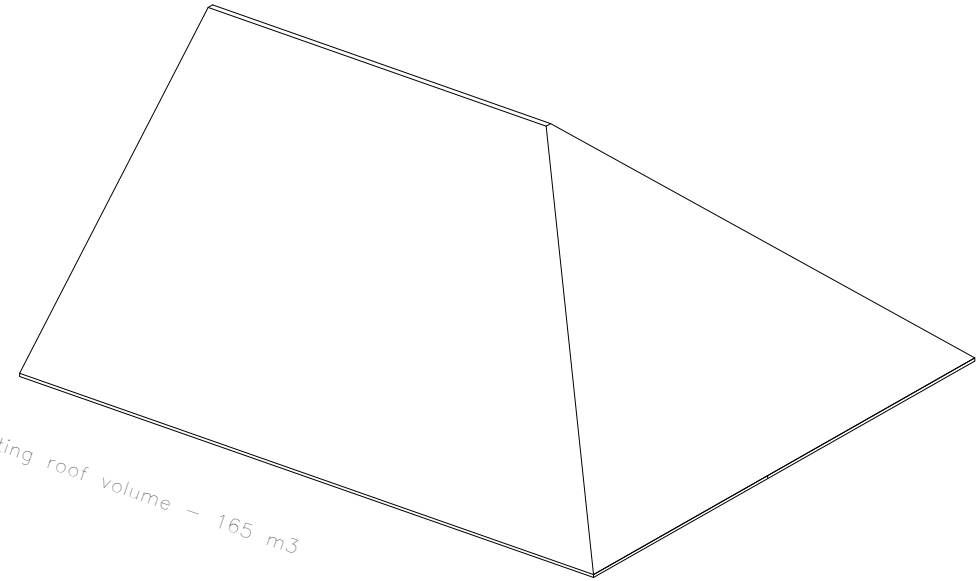

Existing roof volume – 165 m3

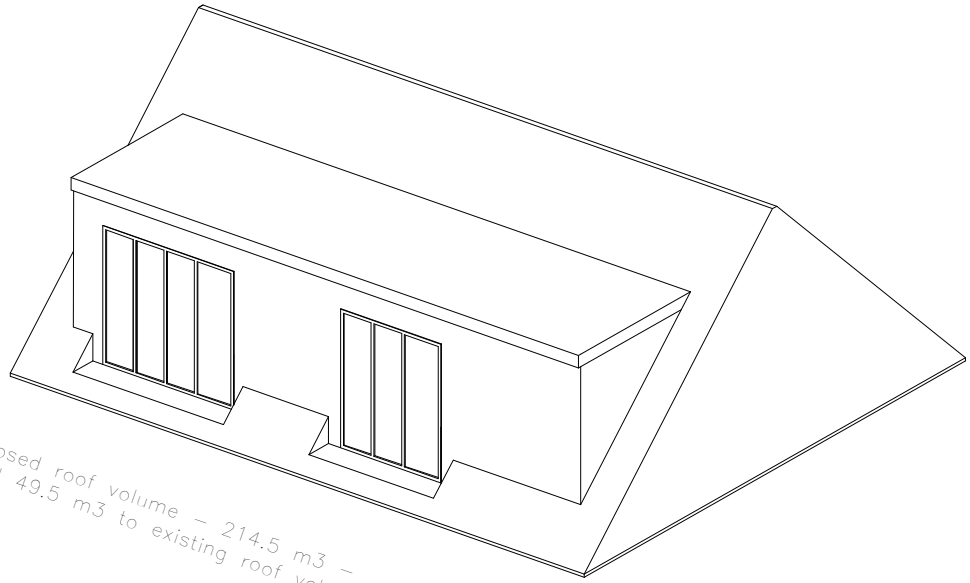

Proposed roof volume – 214.5 m3 – added 49.5 m3 to existing roof volume.

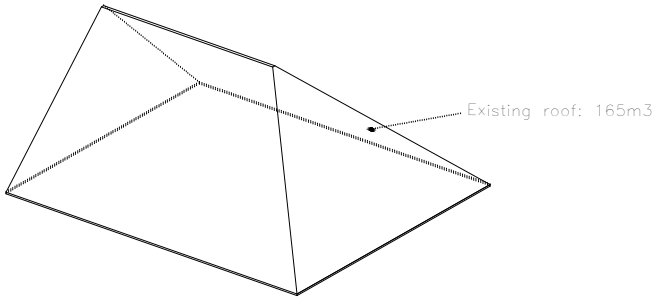

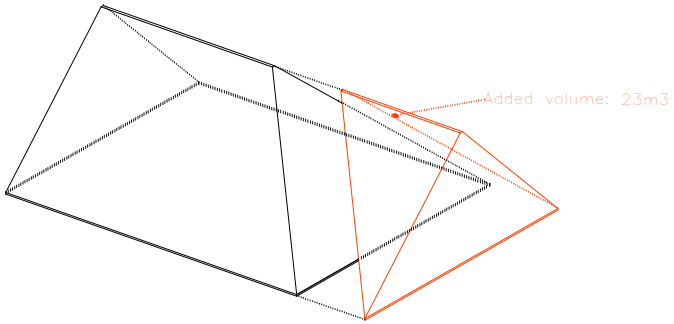

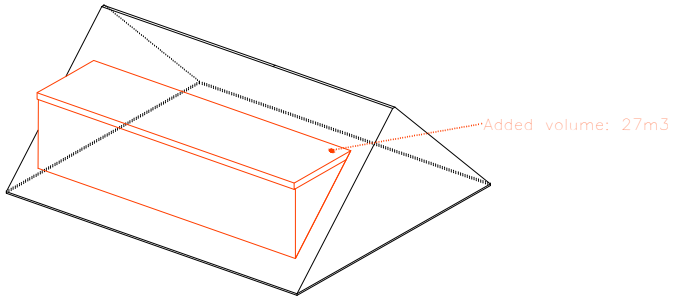

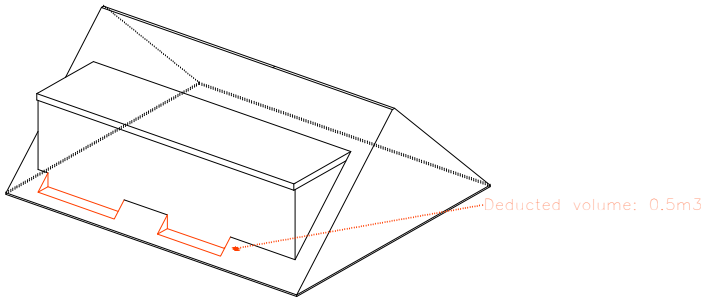

Existing and proposed roof volume counted via AutoCad

E L E V A T I O N S

17 ASMARA ROAD NW2, LONDON

HOUSE CONVERSION

title:	scale:	size:	date:	drawn by:	project no.	drawing no.	revision no.
ROOF VOLUME	1:100	a2	26.02.2016	NN	17_ASMARA	02	01