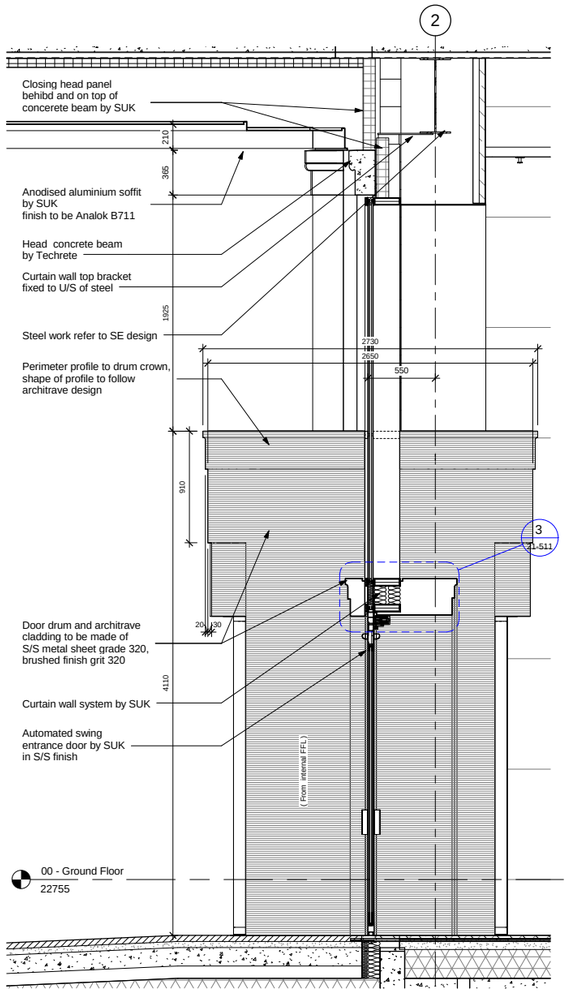

1 Main Entrance Screen - Section
1 : 25

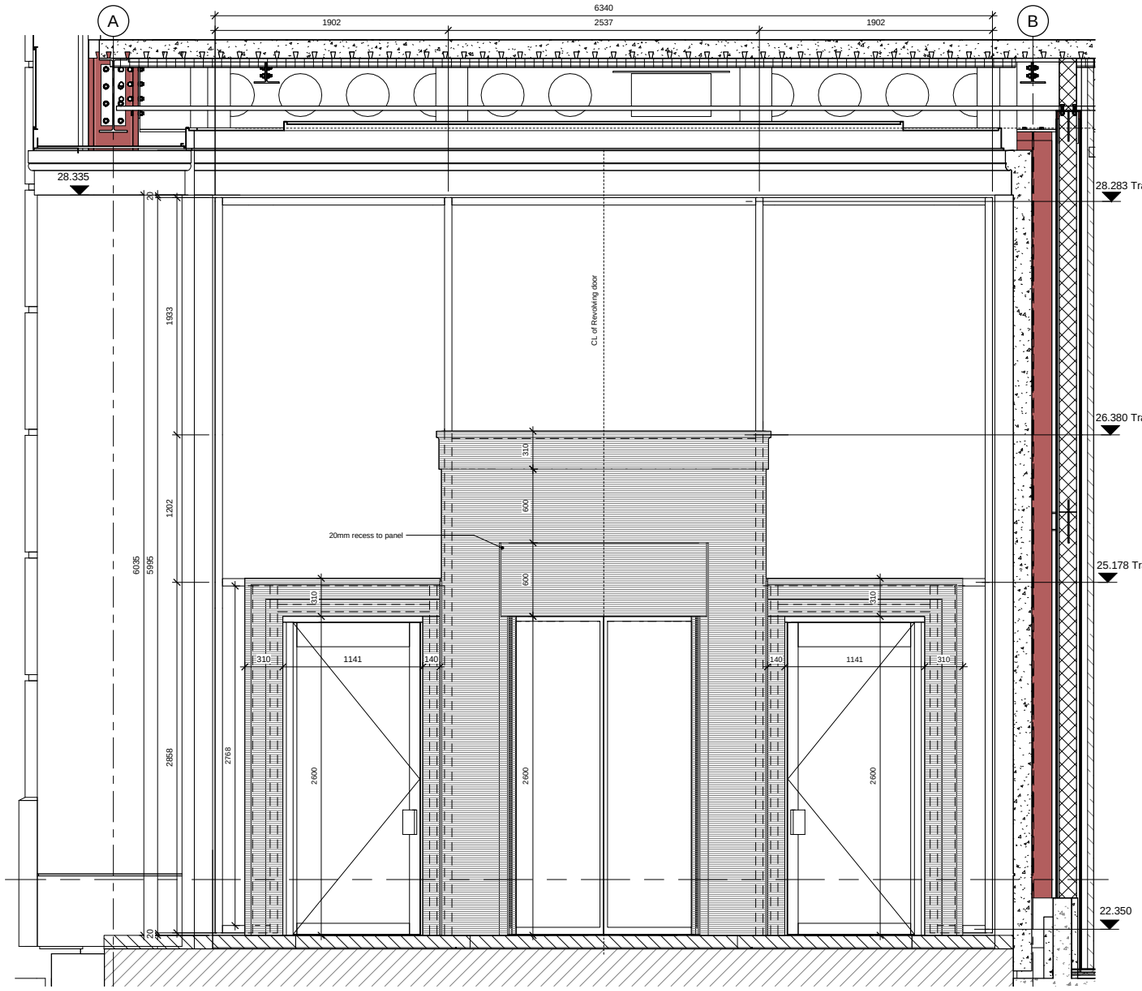

2 Main Entrance Screen - Elevation
1 : 25

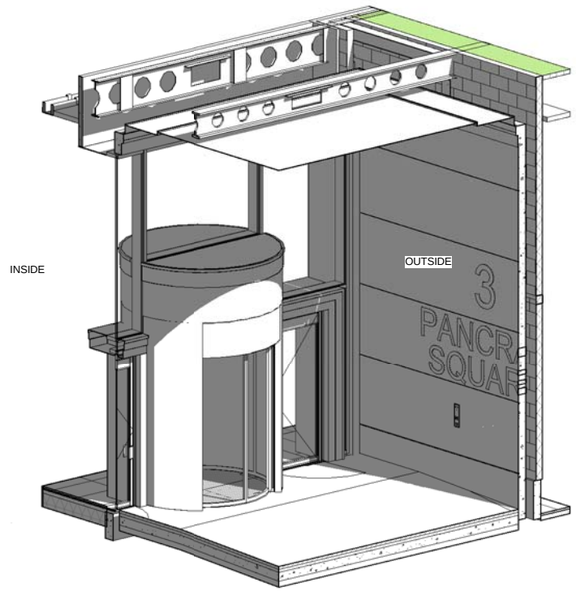

6 3D - Main Entrance Screen

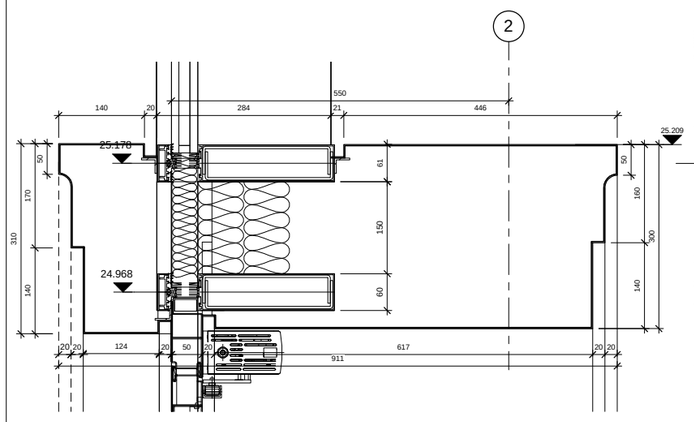

3 Head Architrave Profile Detail
1 : 5

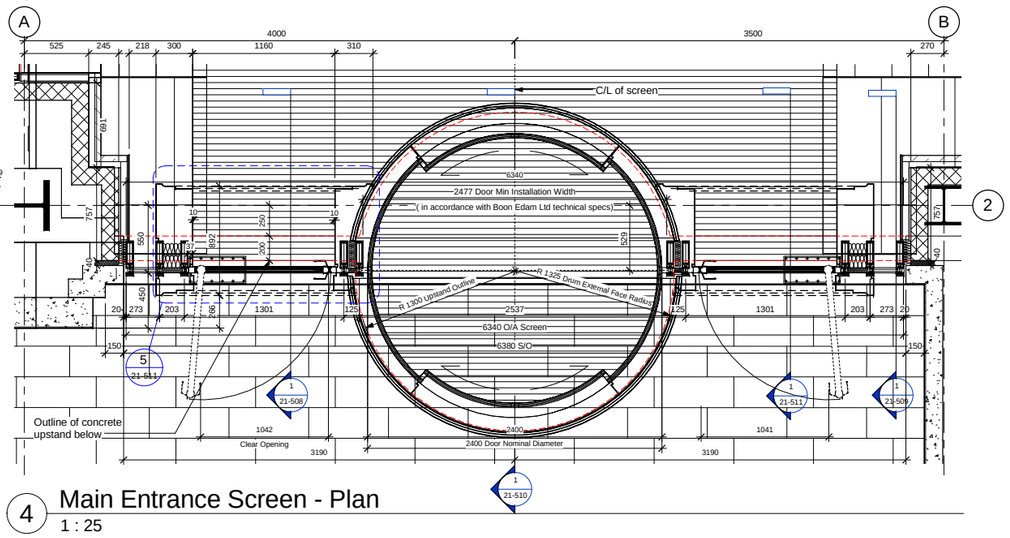

4 Main Entrance Screen - Plan
1 : 25

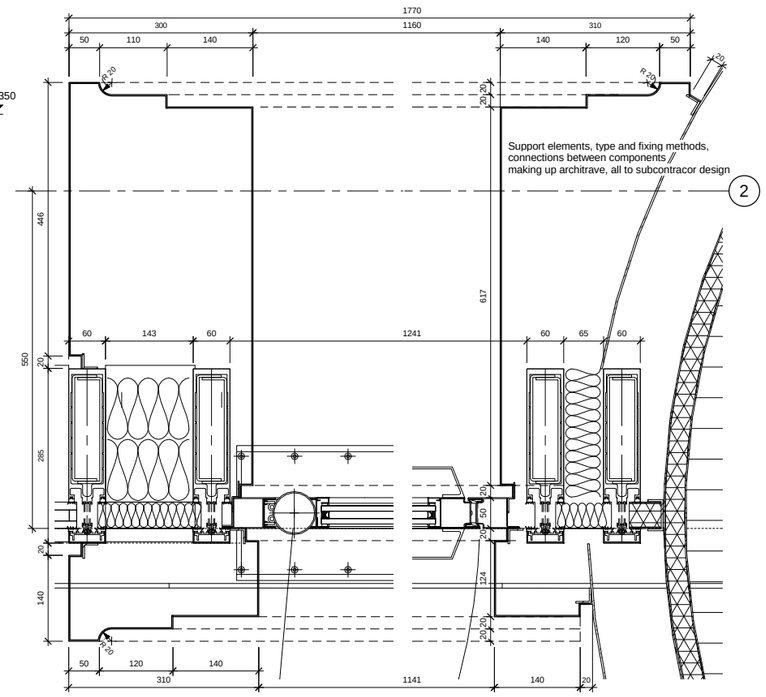

5 Architrave Profile Detail at Jambs
1 : 5

FORMELY DRAWING NUMBER SK012

DO NOT SCALE FROM THIS DRAWING.
ALL DIMENSIONS TO BE CHECKED ON SITE.

NOTES:
1. This drawing shows design intent only & is subject to detailed design from specialists
2. Figured dimensions only are to be taken from this drawing. All contractors must visit site & are responsible for taking & checking all dimensions relating to their work. BAM Design to be advised of any variation between drawings & site conditions.
3. All vertical dimensions to be taken from FFL, please note that all manufacturing schedules are to take this into account.
4. All dimensions are in millimetres unless noted otherwise.
5. All levels in meters unless noted otherwise.

To be read in conjunction with -
BAMD STRU drawings for structural frame, openings, supports (windposts etc.)
BAMD MEP drawings for services layouts, routes.
Kone drawings for Lift details.

rev	by	date	chkd	amendments
001	RS	25/11/15	IAW	General amendments; revolving door changed to two sliding leafs, height lowered to 2600mm, architrave and door drum pressing amended
000	RS	15/01/15	IAW	CONSTRUCTION ISSUE

key plan

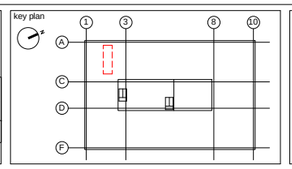

ARGENT

bam
BAM Design Ltd
An operating company of
BAM Construct UK Ltd

Centrium Business Park
Griffiths Way, St Albans
Hertfordshire, AL1 2RD

T 01727 894200
E design@bam.co.uk
W www.bam.co.uk

Architecture
Structural Engineering
Environmental Services
Interior Design
Feasibility Studies
3D Visualisation
Building Information Modelling

project
KINGS CROSS ZONE B
3 PANCRAS SQUARE

title
Main Entrance Screen

drawing status: CONSTRUCTION

contract no.	scale
HSE.0295	As indicated @ A1
client ref. KXC-B6-001	date 09/01/15
drawn by RS	checked by IAW

project no.			rev.
BD4122	A	21-511	001