2000_PROPOSED

LBMV architects

Luigi Montefusco Ltd
27 Elizabeth Mews
NW3 4UH London
T+44 (0) 207 483 3880
info@lbmvarchitects.com
www.lbmvarchitects.com

DRAWINGS STATUS		DRAWN	CHECKED
PLANNING PERMISSION	A3	MC	LM
PROJECT TITLE		DATE	SCALE
SIDE EXTENSION AND INTERNAL ALTERATION		15.12.2015	
		DRAWING TITLE	
Flat 1 10 Lyndhurst Gardens NW3 5NR			
		JOB NO	DRAWING NO
		0051	A2000

GENERAL NOTE
- This drawing should be removed from currency immediately when a revised version is issued.
- All dimensions to be checked on site by the contractor. Discrepancies to be reported before proceeding with the works.
- This drawing is copyrighted.
- All dimensions in mm's.

LEGEND

REV	DESCRIPTION	DATE	NAME
--	--	--	--

PROPOSED GROUND FLOOR PLAN

SCALE 1:200

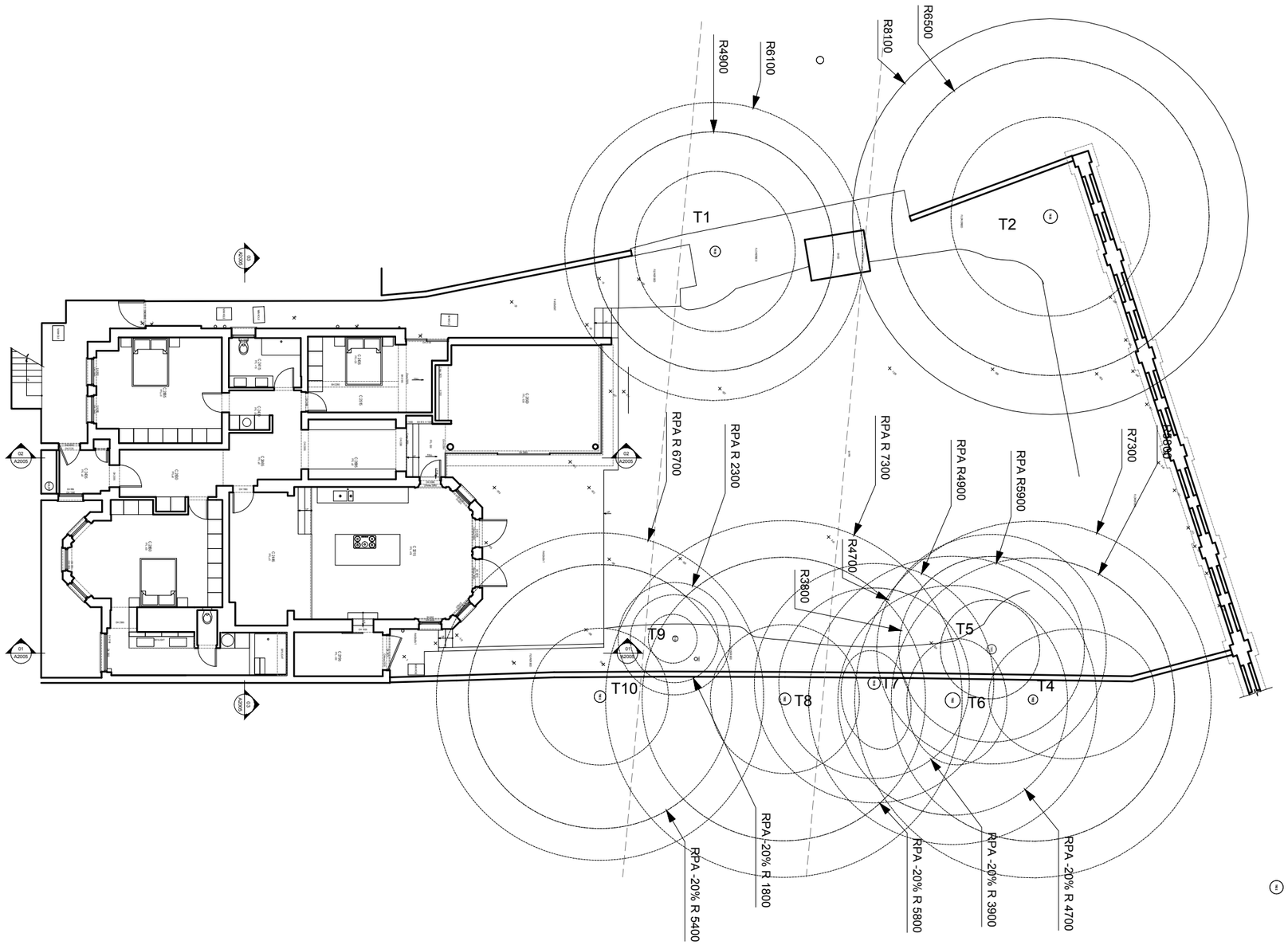

LBMV architects

Luigi Montefusco Ltd
27 Elizabeth Mews
NW3 4UH London
T+44 (0) 207 483 3880
info@lbmvarchitects.com
www.lbmvarchitects.com

DRAWINGS STATUS: PLANNING PERMISSION	A3	DRAWN: MC	CHECKED: LM
PROJECT TITLE: SIDE EXTENSION AND INTERNAL ALTERATION		DATE: 15.12.2015	SCALE: 1:200@A3
		DRAWING TITLE: PROPOSED GROUND FLOOR PLAN	
Flat 1 10 Lyndhurst Gardens NW3 5NR		JOB NO: 0051	DRAWING NO: A2001

GENERAL NOTE
- This drawing should be removed from currency immediately when a revised version is issued.
- All dimensions to be checked on site by the contractor. Discrepancies to be reported before proceeding with the works.
- This drawing is copyrighted.
- All dimensions in mm's.

LEGEND

N

1:200 0 1 10 m

REV	DESCRIPTION	DATE	NAME
--	--	--	--

PROPOSED GROUND FLOOR PLAN_01

SCALE 1:100

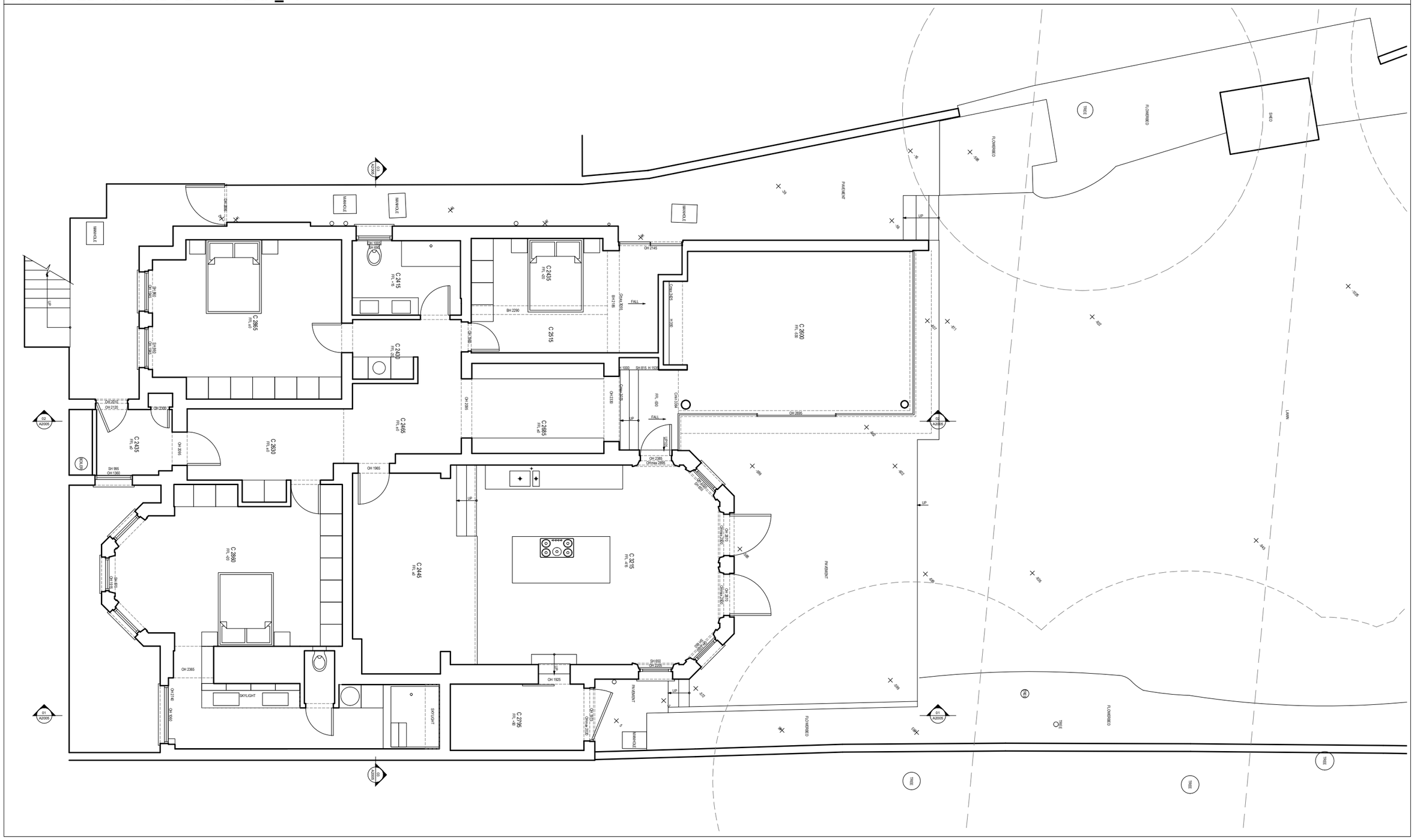

LBMV architects

Luigi Montefusco Ltd
27 Elizabeth Mews
NW3 4UH London
T+44 (0) 207 483 3880
info@lbmvarchitects.com
www.lbmvarchitects.com

DRAWINGS STATUS: PLANNING PERMISSION	A3	DRAWN: MC	CHECKED: LM
PROJECT TITLE: SIDE EXTENSION AND INTERNAL ALTERATION		DATE: 15.12.2015	SCALE: 1:100@A3
		DRAWING TITLE: PROPOSED GROUND FLOOR PLAN	
Flat 1 10 Lyndhurst Gardens NW3 5NR		JOB NO: 0051	DRAWING NO: A2003

GENERAL NOTE
- This drawing should be removed from currency immediately when a revised version is issued.
- All dimensions to be checked on site by the contractor. Discrepancies to be reported before proceeding with the works.
- This drawing is copyrighted.
- All dimensions in mm's.

LEGEND

N

1:100 0 1 5 m

REV	DESCRIPTION	DATE	NAME
--	--	--	--

PROPOSED ROOF PLAN

SCALE 1:100

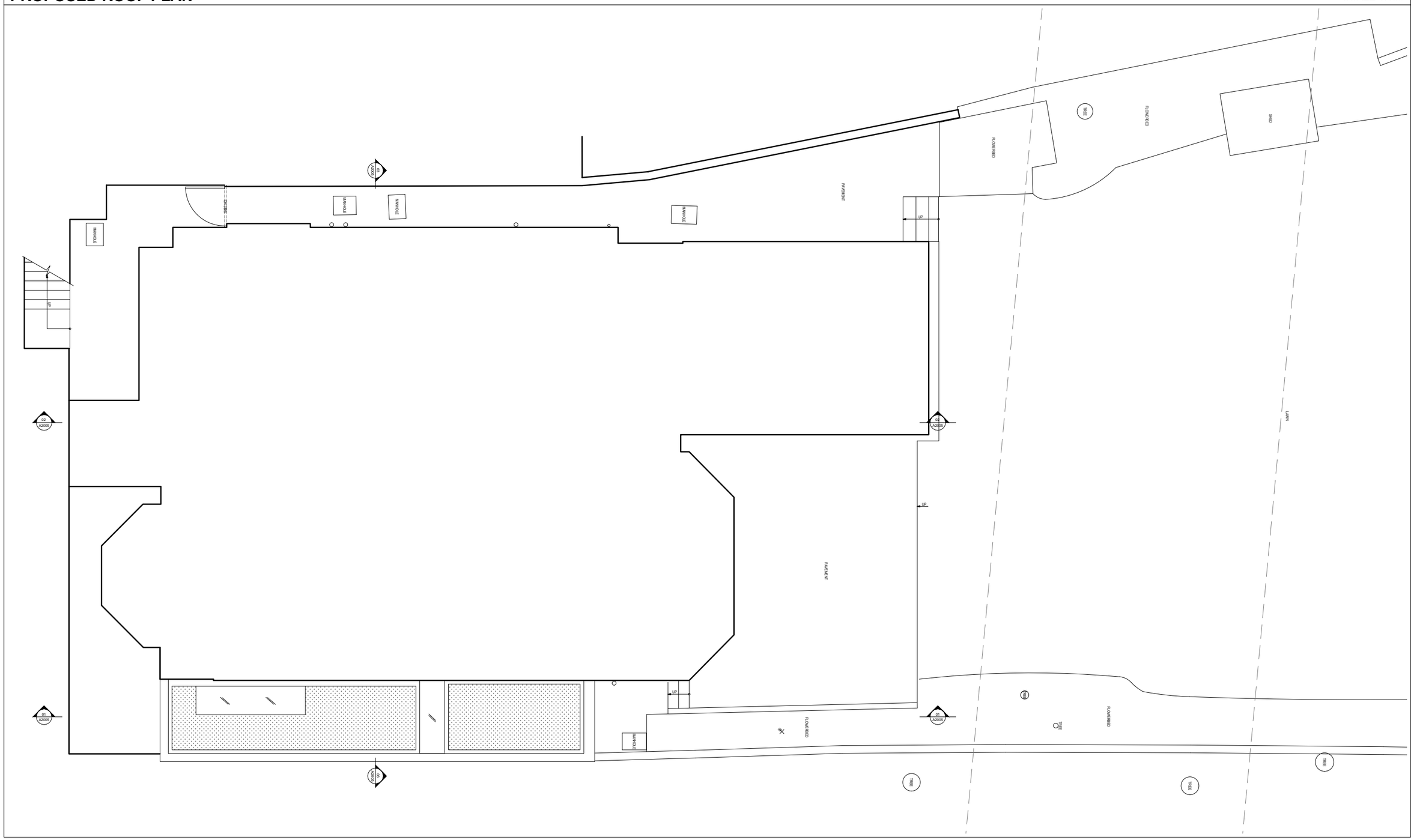

LBMV architects

Luigi Montefusco Ltd
27 Elizabeth Mews
NW3 4UH London
T+44 (0) 207 483 3880
info@lbmvarchitects.com
www.lbmvarchitects.com

DRAWINGS STATUS		DRAWN	CHECKED
PLANNING PERMISSION	A3	MC	LM
PROJECT TITLE		DATE	SCALE
SIDE EXTENSION AND INTERNAL ALTERATION		15.12.2015	1:100@A3
		DRAWING TITLE	
		PROPOSED ROOF PLAN	
Flat 1 10 Lyndhurst Gardens NW3 5NR		JOB NO	DRAWING NO
		0051	A2004

GENERAL NOTE
- This drawing should be removed from currency immediately when a revised version is issued.
- All dimensions to be checked on site by the contractor. Discrepancies to be reported before proceeding with the works.
- This drawing is copyrighted.
- All dimensions in mm's.

LEGEND

N

1:100 0 1 5 m

REV	DESCRIPTION	DATE	NAME
--	--	--	--

PROPOSED SECTION 01

SCALE 1:100

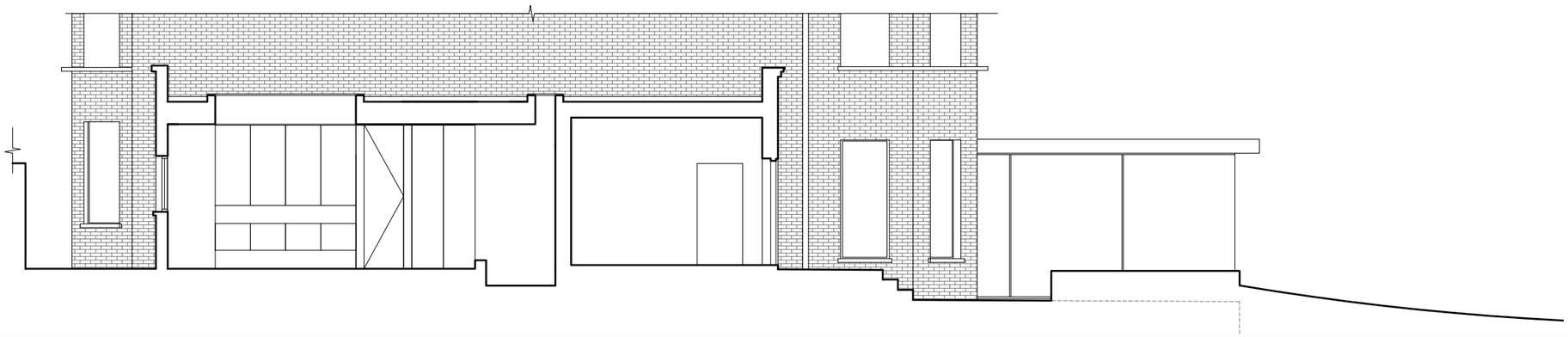

PROPOSED SECTION 02

SCALE 1:100

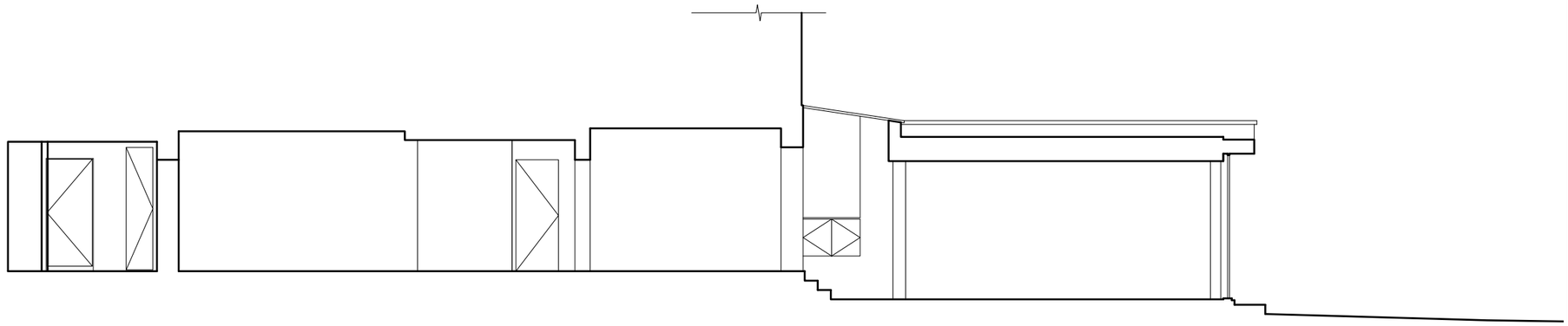

PROPOSED SECTION 03

SCALE 1:100

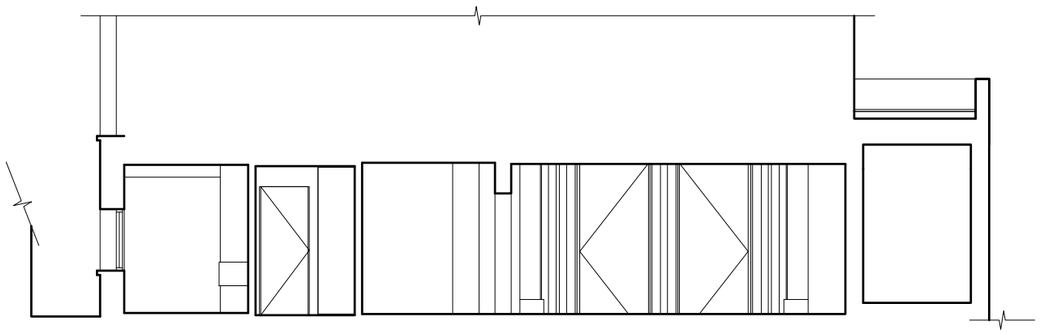

LBMV architects

Luigi Montefusco Ltd
27 Elizabeth Mews
NW3 4UH London
T+44 (0) 207 483 3880
info@lbmvarchitects.com
www.lbmvarchitects.com

DRAWINGS STATUS		DRAWN	CHECKED
PLANNING PERMISSION	A3	MC	LM
PROJECT TITLE		DATE	SCALE
SIDE EXTENSION AND INTERNAL ALTERATION		15.12.2015	1:100@A3
		DRAWING TITLE	
		PROPOSED SECTIONS	
Flat 1 10 Lyndhurst Gardens NW3 5NR		JOB NO	DRAWING NO
		0051	A2005

GENERAL NOTE
- This drawing should be removed from currency immediately when a revised version is issued.
- All dimensions to be checked on site by the contractor. Discrepancies to be reported before proceeding with the works.
- This drawing is copyrighted.
- All dimensions in mm's.

LEGEND

1:100 0 1 5 m

REV	DESCRIPTION	DATE	NAME
--	--	--	--