Typical head detail

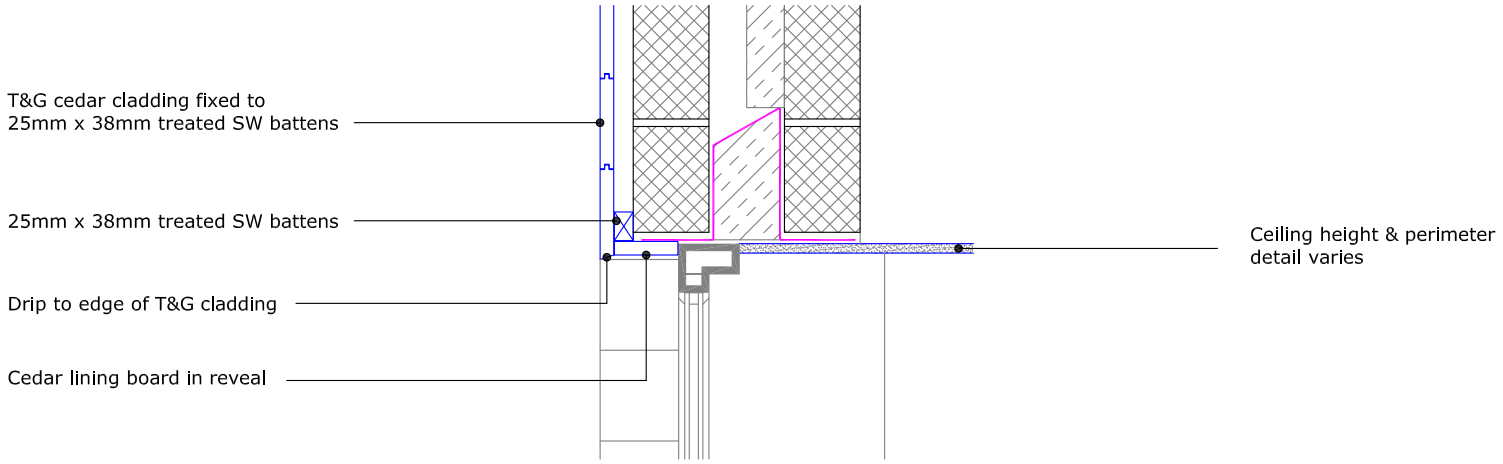

Typical cill detail

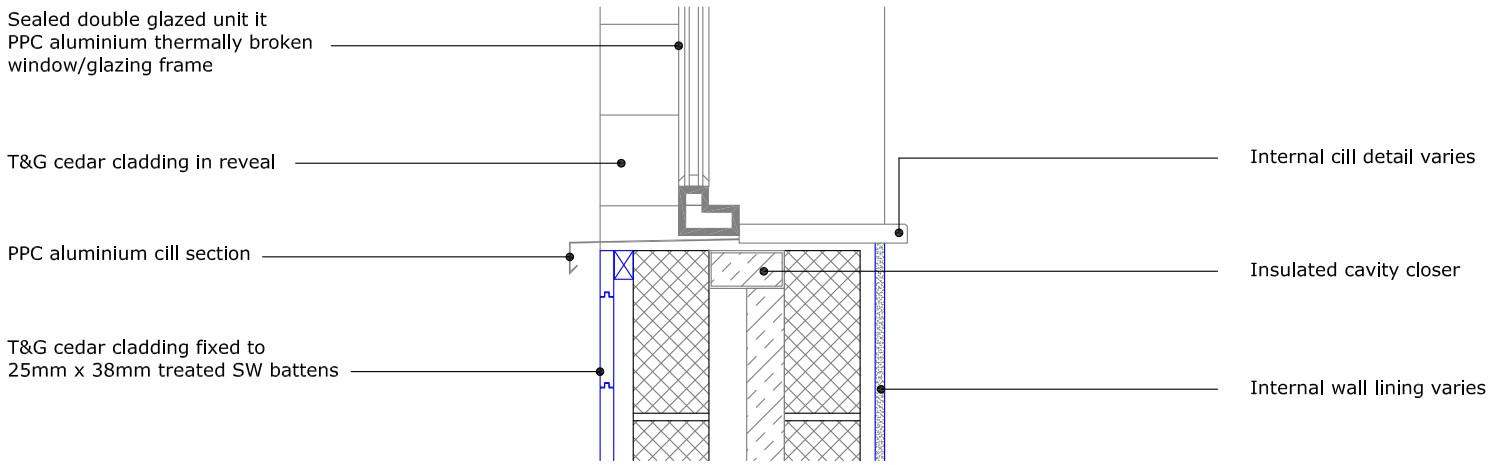

Typical jamb detail

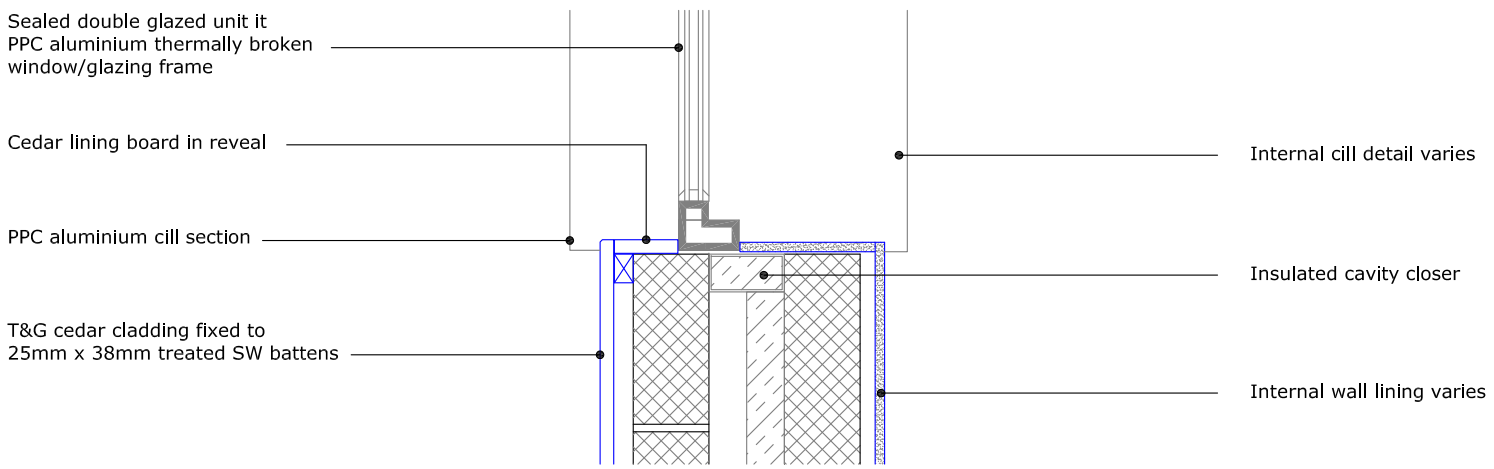

CONSTRUCTION

-	-	-	-
-	-	-	-
-	-	-	-
-	-	-	-
-	-	-	-
-	-	-	-
-	-	-	-
-	-	-	-
-	-	-	-
-	-	-	-
-	-	-	-
-	-	-	-
A	21/09/15	RGH	Issued for construction

RGH INNOVATE - OPTIMISE - DELIVER
Friars Gap Hitchin Road
Weston Hitchin Herts SG4 7AX
tel +44 (0) 1462 790808
fax +44 (0) 1462 790232
email info@rgh.uk.com

client
Tykos Holdings Group

job title
New residential dwelling
Netherhall Gardens
NW3 5RN

drawing title
Typical
window details
-

job no	drawing no
12004	A-029
date: Mar 2015	A - - - - - - - -

scale	sheet size	drawn	checked
1:10	A3	RGH	RGH