NOTE
All 'Proposed' dimensions are for manufacturing purposes and therefore may differ slightly from the 'Existing' dimensions.

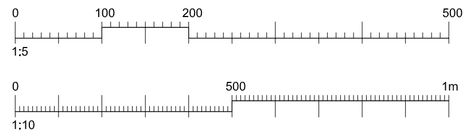

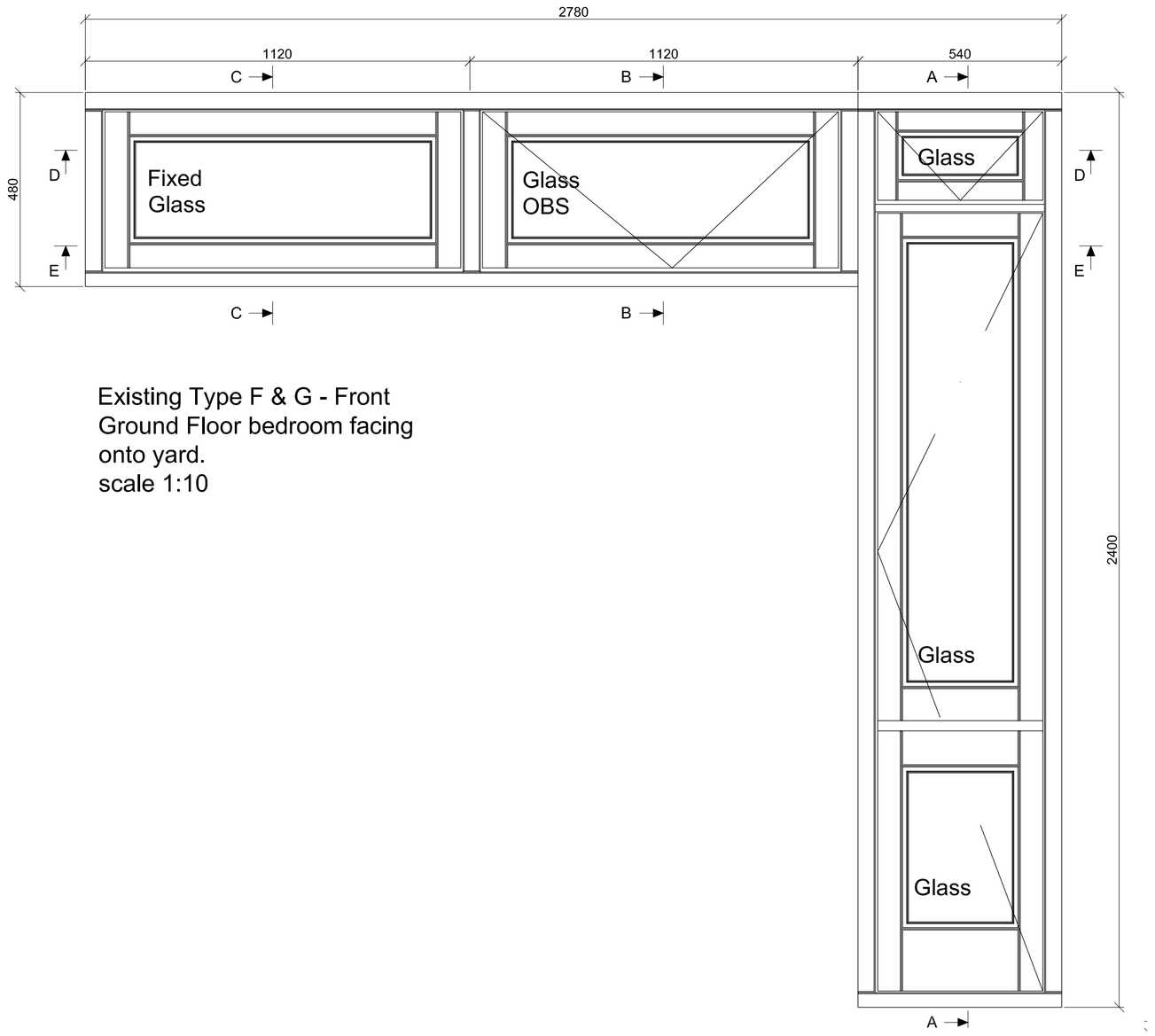

Existing Type F & G - Front Ground Floor bedroom facing onto yard.
scale 1:10

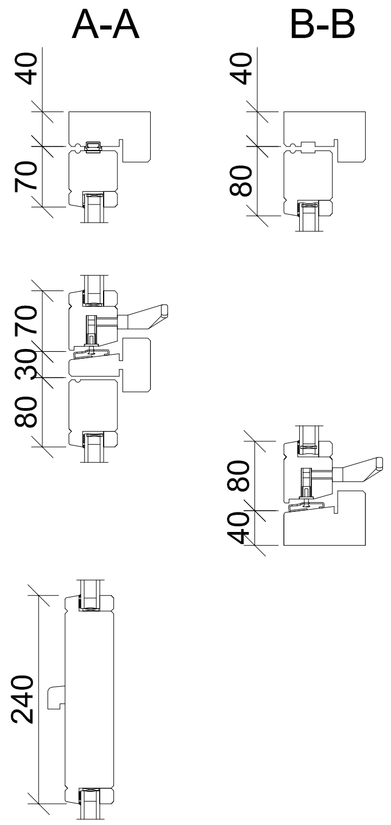

Existing Head & Cill Details
scale 1:5

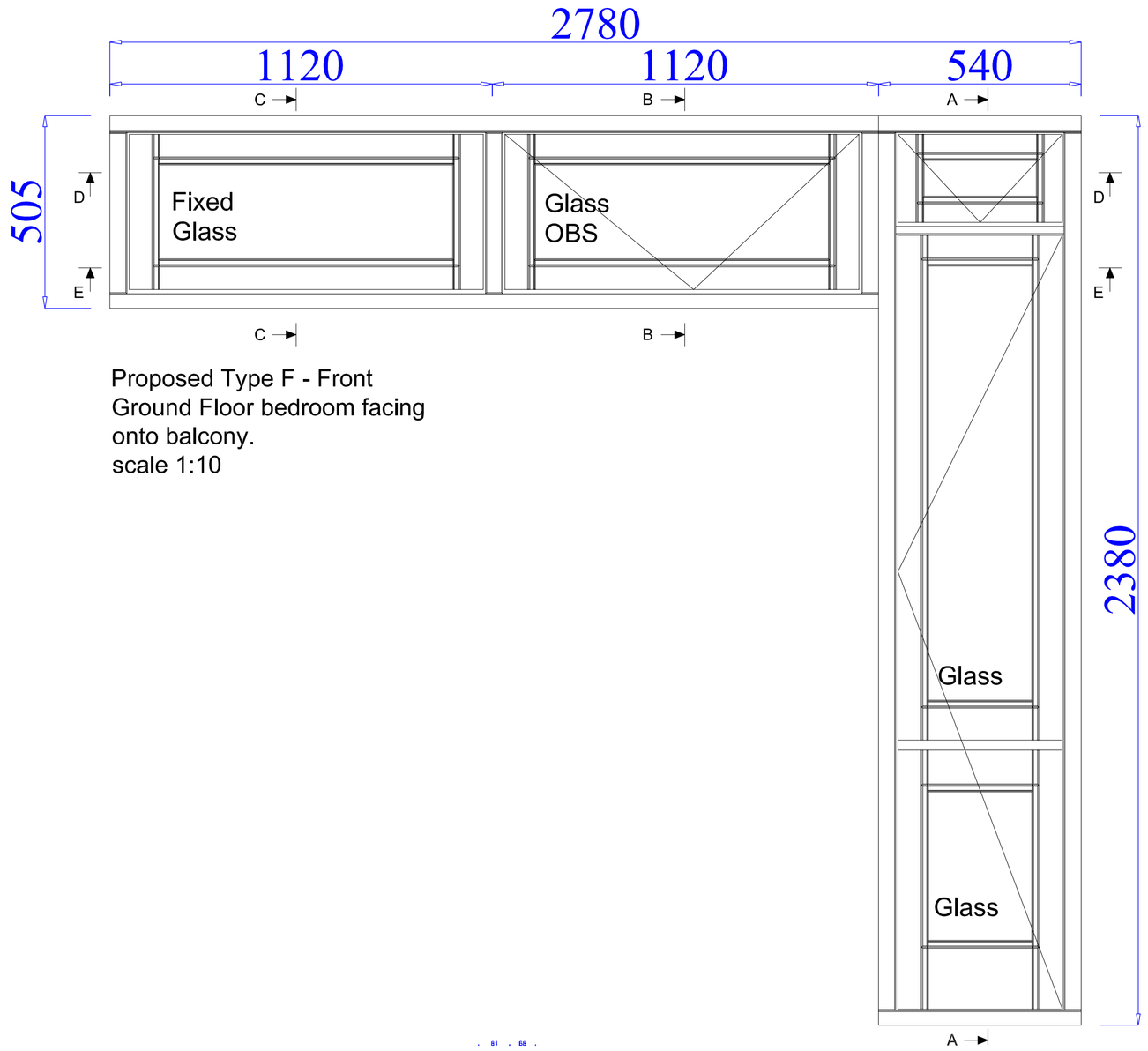

Proposed Type F - Front Ground Floor bedroom facing onto balcony.
scale 1:10

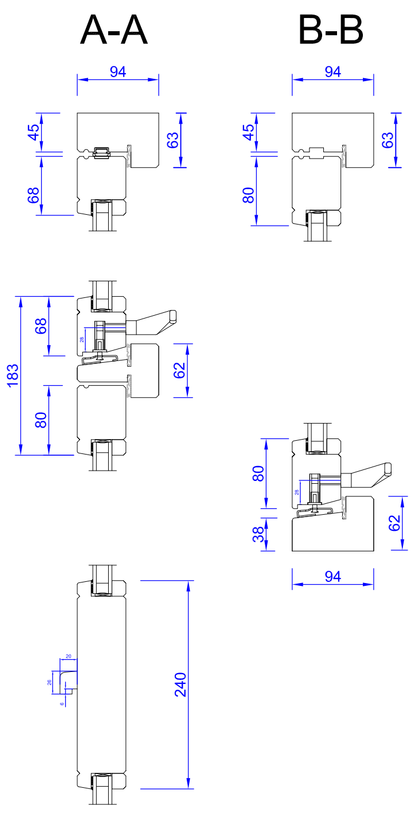

Proposed Head & Cill Details
scale 1:5

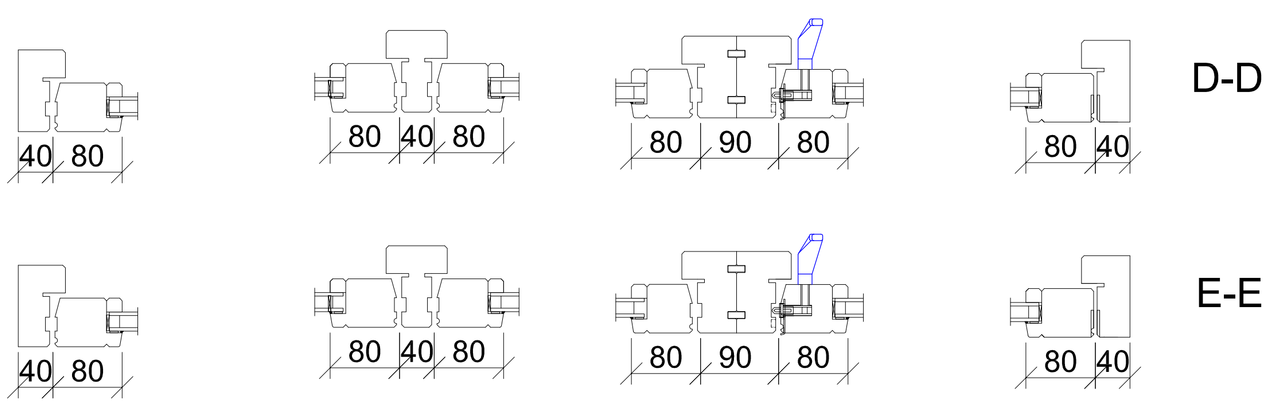

Existing Jamb Details
scale 1:5

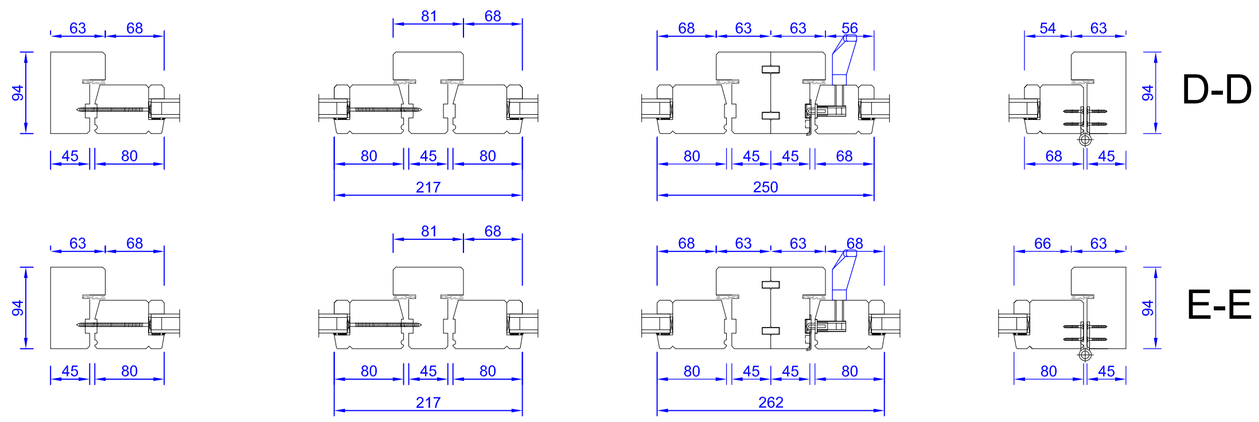

Proposed Jamb Details
scale 1:5

The contractor is responsible to ensure that no products are to be utilised that do not comply with relevant British and/or European Standards and/or Codes of Practice, CoshH Regulations, Construction regulations, or which are known or suspected at the time of product selection and/or construction to be deleterious to health and safety or to the durability of the work or not in accordance with good building practices.

The contractor is responsible for checking dimensions, tolerances, levels and references. This drawing is to be read in conjunction with all relevant consultants or specialists drawings. Any discrepancy to be notified to Baily Garner LLP and rectified before proceeding with the works on site or shop drawings.

Where an item is covered by drawings to different scales, the larger scale drawing is to be worked to.

Do not scale drawings. Figured dimensions to be worked to in all cases.

This drawing and the copyrights and patents therein are the property of Baily Garner LLP and may not be used or reproduced without consent or attribution.

A1

REVISION D C DATE

CLIENT.
Keepmoat Regeration (Apollo) Ltd

PROJECT.
Mansfield Road External Upgrades

ADDRESS.
Apollo Site Office
Kiln Place
Lamble Street, NW5 4AB

TITLE.
Existing & Proposed
Window Type F & G

PURPOSE OF ISSUE.
Planning

SCALE.	D	C	DATE
1:5/10	YW		30/11/15

JOB NO.	DRAWING No.	REVISION
27241	PL 21	

BAILY · GARNER
146-148 ELTHAM HILL
LONDON SE9 5DY
t. 020 8294 1000
f. 020 8294 1320
e. general@bailygarner.co.uk