SDJ DESIGN LTD
Accept No Responsibility for Structural Stability of Pergola. Main Contractor to obtain advice from Structural Engineer for Timber Sizes/Foundation Details and Fixings.

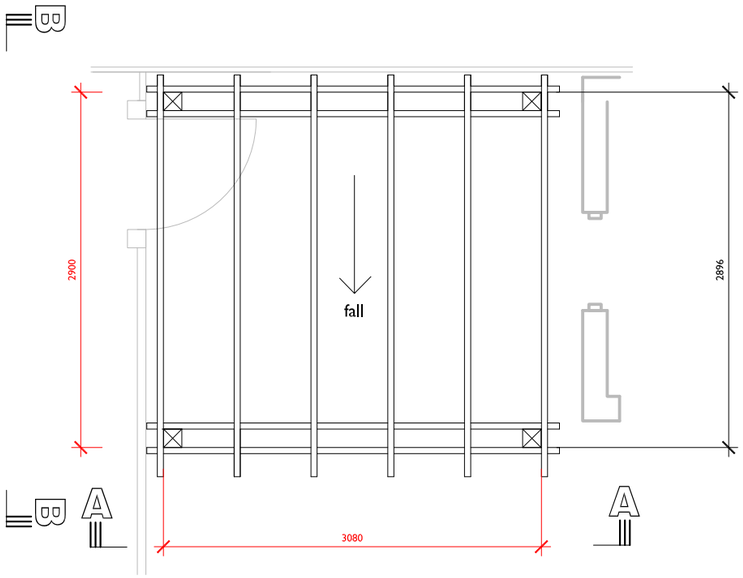

PLAN OF PERGOLA

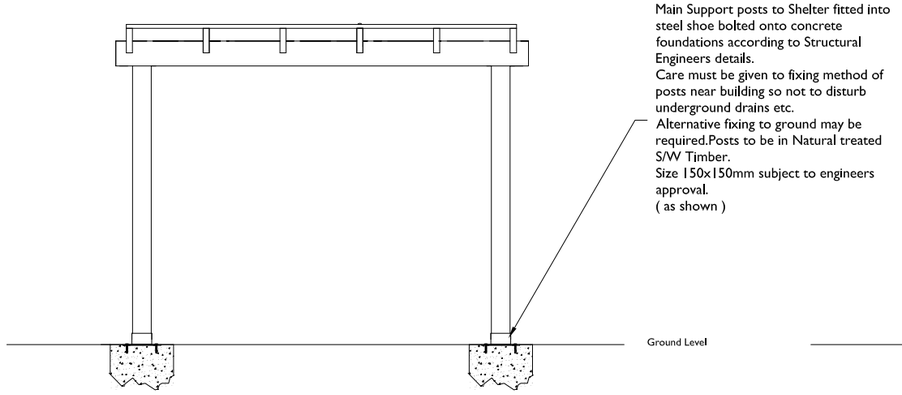

END ELEVATION AA

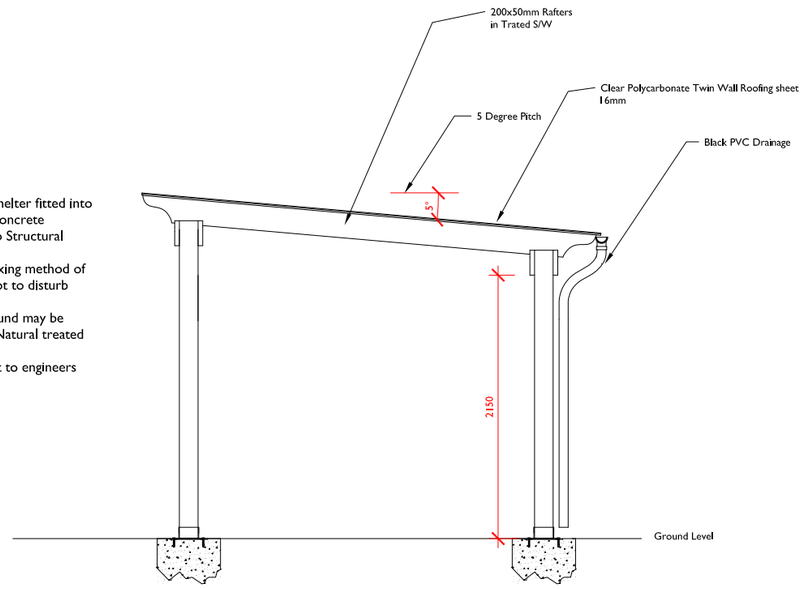

SIDE ELEVATION BB

NOTE:

The Contractor is to check and verify all building and site dimensions, levels and sewer invert levels at connection points before work starts.

This drawing must be read with and checked against any structural or other specialist drawings provided.

The Contractor is to comply in all respects with the current Building Regulations whether or not specifically stated on these drawings.

This drawing is not intended to show details of foundation or ground conditions. Each area of ground relied upon to support the structure depicted must be investigated by the Contractor and suitable methods of foundation be provided.

This drawing is to be read in conjunction with all other standard Mitchells and Butlers specifications and documentation.

© This drawing remains the copyright of Mitchells and Butlers.

sdj DESIGN
18 Nell Lane Chorlton Manchester M21 7UD
Tel 0161 282 1321 e-mail steve@sdjdesign.co.uk

THIS DRAWING BEEN PREPARED FOR PRESENTATION PURPOSES CONSULTANTS/CONTRACTORS WISHING TO USE THE DRAWING FOR GUIDANCE MUST CHECK ALL DIMENSIONS ON SITE PRIOR TO FINALISING THEIR ELEMENT OF WORK UNDERTAKEN

Rev.		By	Date

Mitchells & Butlers
27 Fleet Street
Birmingham
B3 1JP
Tel. 0870 609 3000
www.mbplc.com

Brand: CASTLE

B.U.N. No.: 11614

Site: EDINBORO' CASTLE CAMDEN

Title: DETAILS OF PERGOLA OVER BBQ

Project Manager/ Checked	Drawn By	Scale	Date
	SDJ	1:50@A3	18.10.15

Arch/Des.	Drawing Number	Rev.
	EDCC 15	