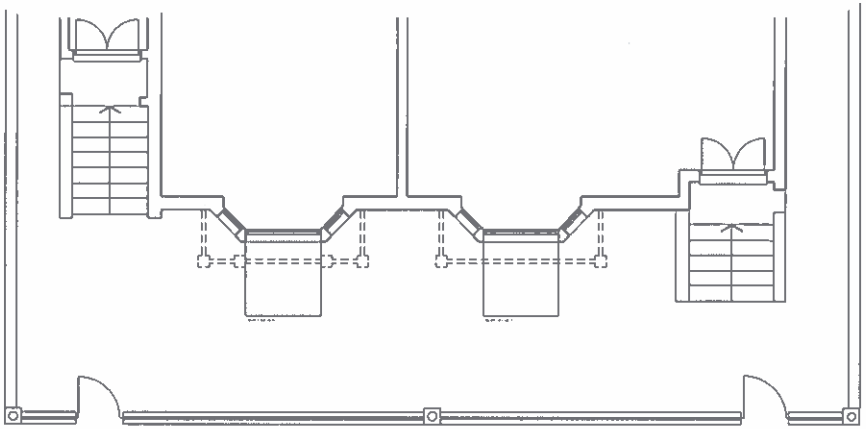

EXISTING PLAN
SCALE 1:50

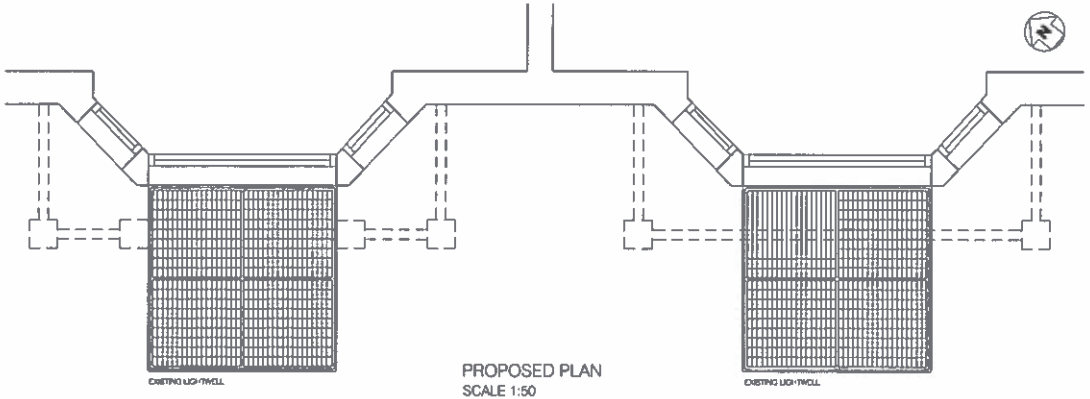

PROPOSED PLAN
SCALE 1:50

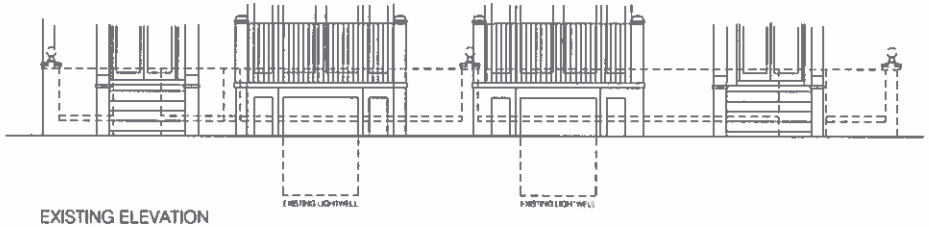

EXISTING ELEVATION
SCALE 1:50

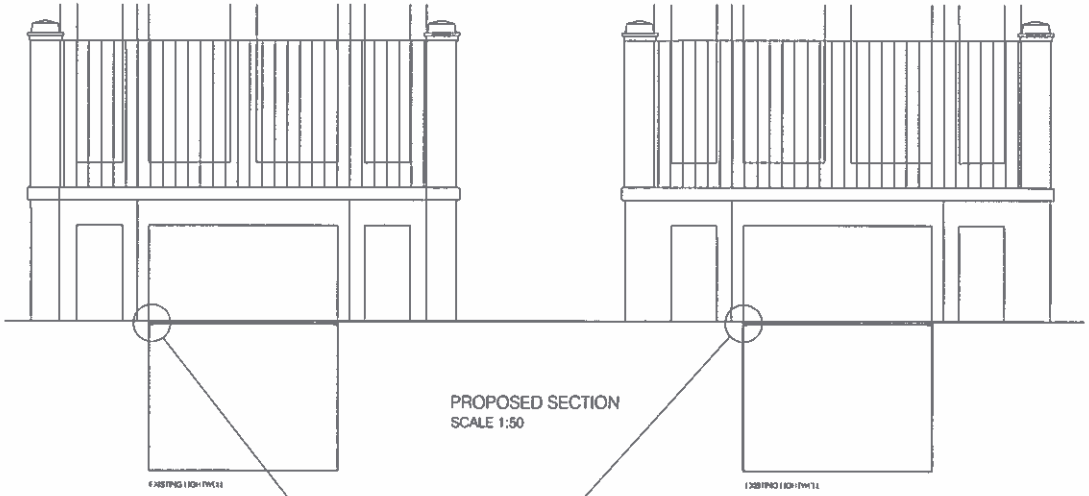

PROPOSED SECTION
SCALE 1:50

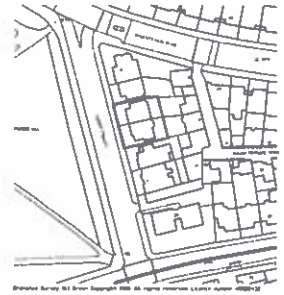

LOCATION PLAN
SCALE 1:1250

EXISTING STREET VIEW
NOT TO SCALE

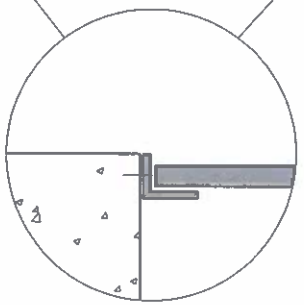

SPECIFICATION
Outer main frame from 40x40x6mm angle section bolted directly within opening with M8 chemical resin anchors. Grille is constructed from 25 x 10 sections spaced with a maximum 50mm between rails.

all dimensions to be checked on site as work commences and any discrepancies or omissions reported immediately.

client: Insiro Lettings
3-4 Albert Terrace
London, NW1 7SU

job title: Proposed Lightwell Railings

dwg title: General Arrangement
Existing & Proposed

dwg. no: 100 - 01	drawn by: CH	scale: As Shown
revision suffix: C	status:	date: Sept 2015

Rev.	Description	Date
A	Railing changed for grille covers over lightwells.	
B	Grille specification revised.	
C	Minor amendments.	

Arun Associates