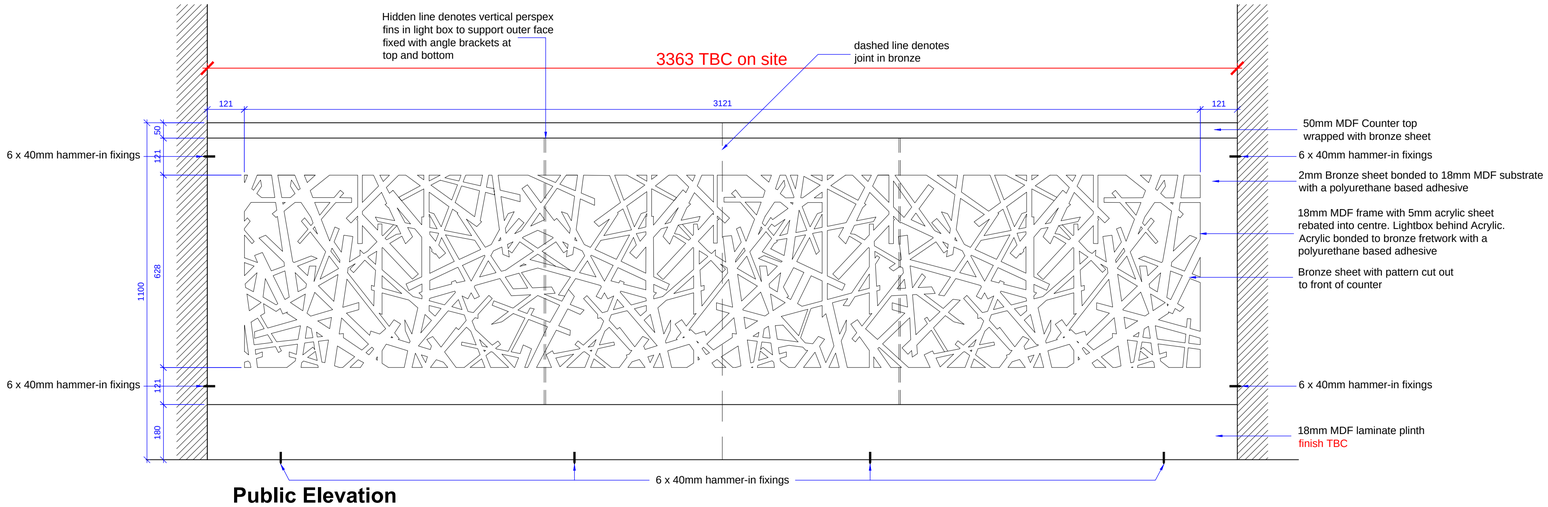

Public Elevation

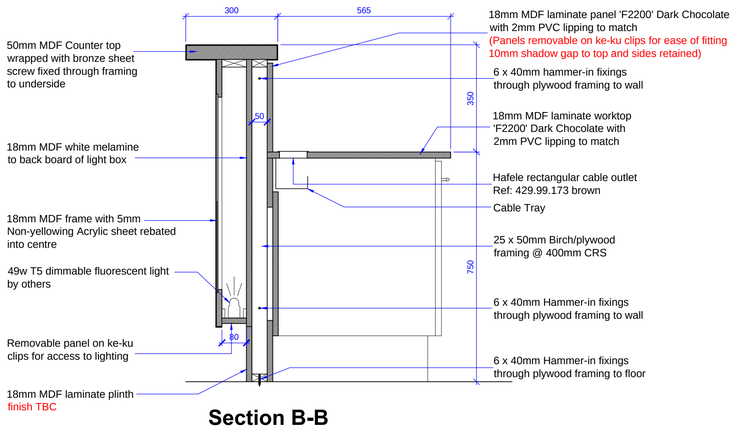

Section B-B

Note:- All doors fixed with Blum 170° hinges

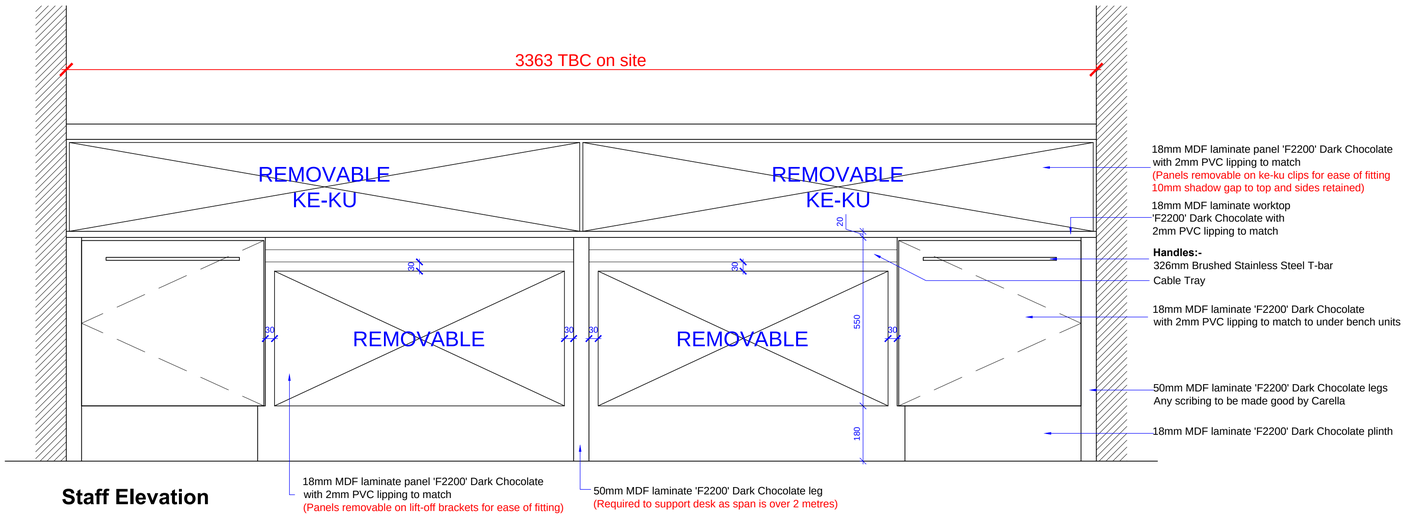

Staff Elevation

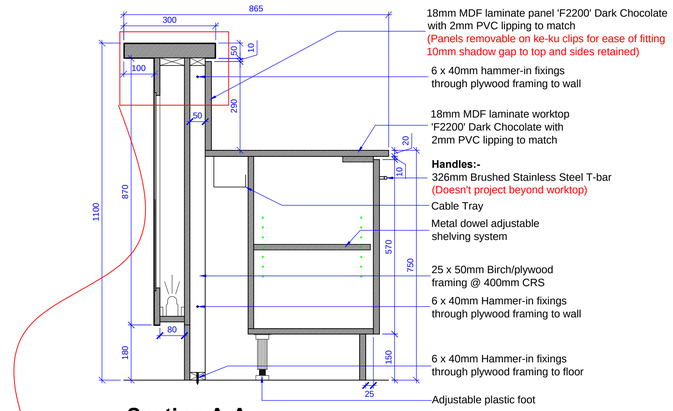

Section A-A

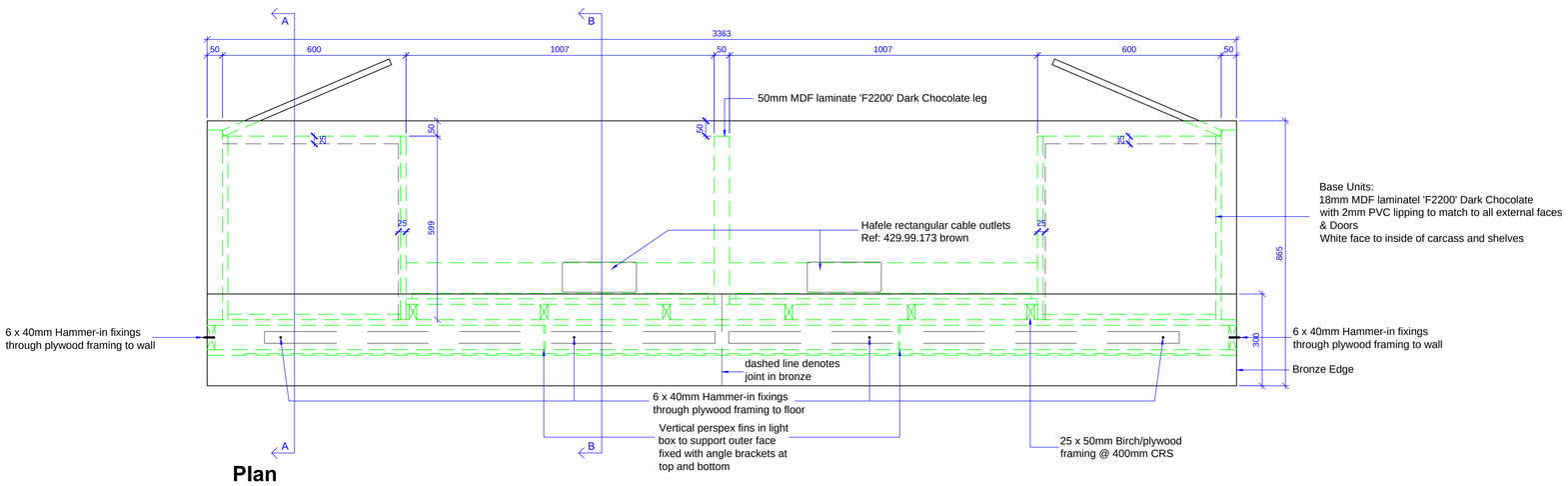

Plan

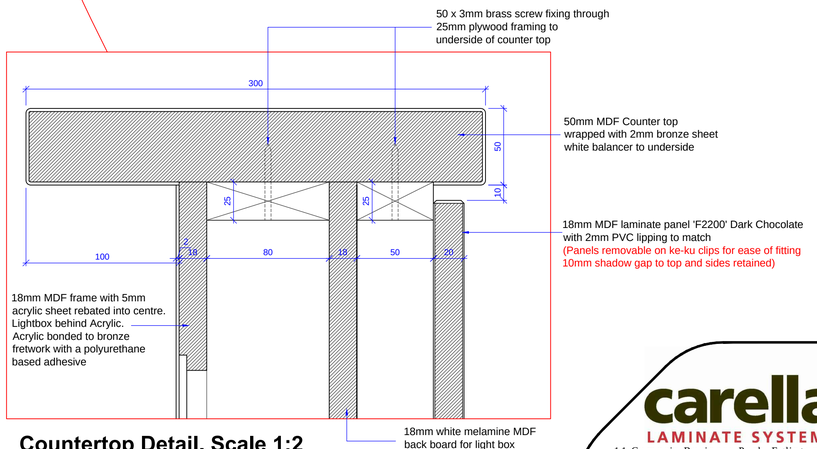

Countertop Detail. Scale 1:2

carella LAMINATE SYSTEMS
11 Campsie Business Park, Eglinton
Tel: 028 7181 0330 Fax: 028 7181 1604

Dwg No: CARELLA-SOAS-X-DRW-XXX-00-014	Title: Large Reception Desk
Project: School of Oriental & African Studies (Soas)	Date: 8th June 2015
Details:	Scale (mm): 1:10
Drawn By: Carl Gallagher	Rev: C (28/08/15)