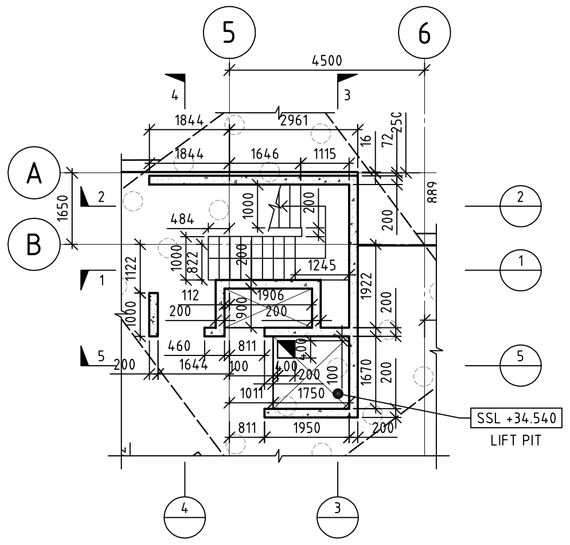

GROUND FLOOR
SCALE 1:100
SSL +35.740
FFL +35.890
250 RC SLAB

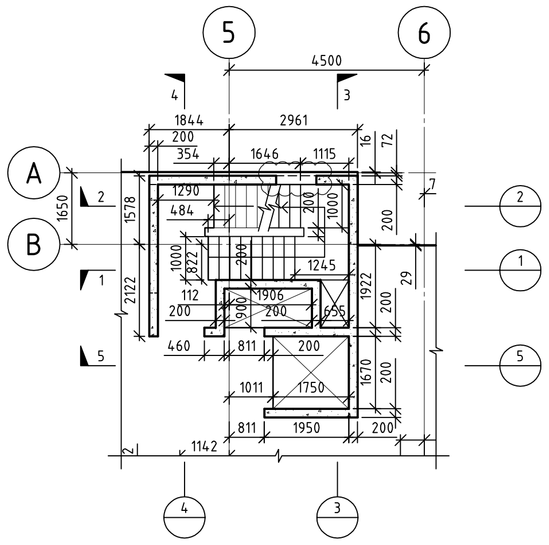

FIRST FLOOR
SCALE 1:100
SSL +38.795
FFL +38.890
225 RC SLAB

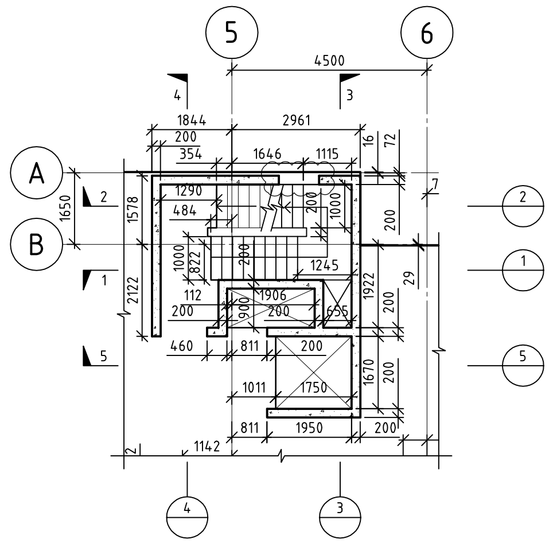

SECOND FLOOR
SCALE 1:100
SSL +41.795
FFL +41.890
225 RC SLAB

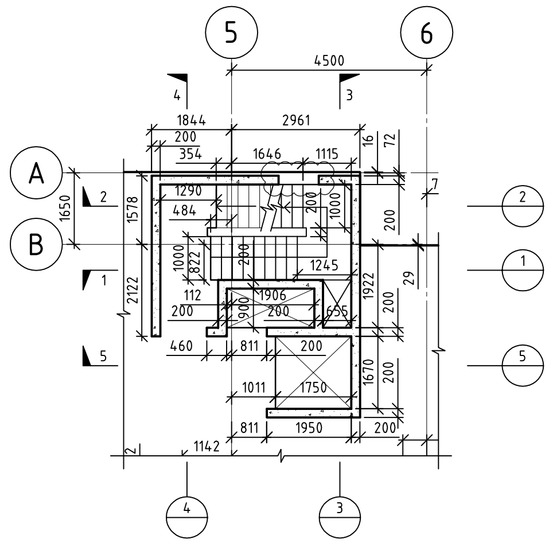

THIRD FLOOR
SCALE 1:100
SSL +44.795
FFL +44.890
225 RC SLAB

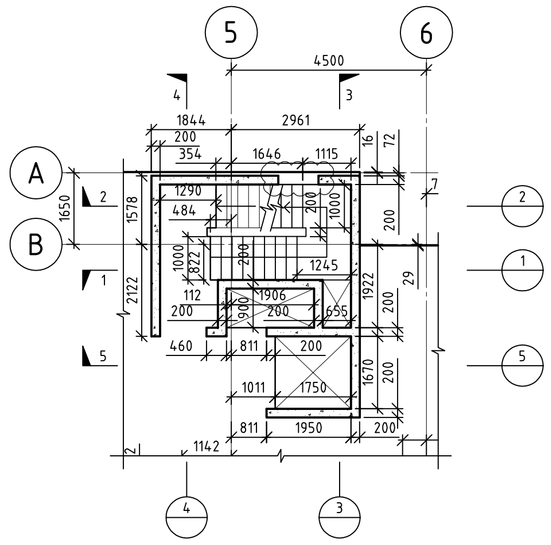

FOURTH FLOOR
SCALE 1:100
SSL +47.795
FFL +47.890
225 RC SLAB

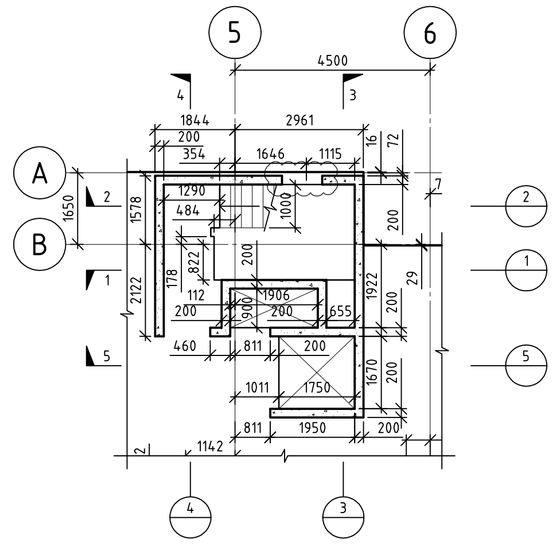

FIFTH FLOOR
SCALE 1:100
SSL +50.795
FFL +50.890
225 RC SLAB

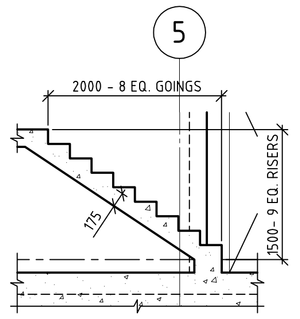

DETAIL A
SCALE 1:50

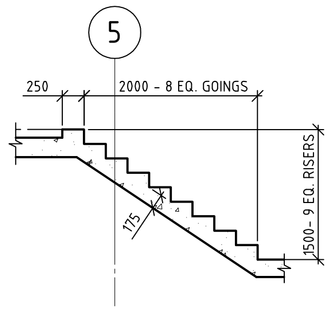

DETAIL B
SCALE 1:50

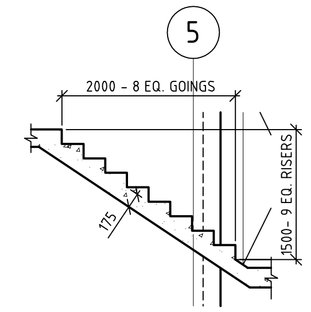

DETAIL C
SCALE 1:50

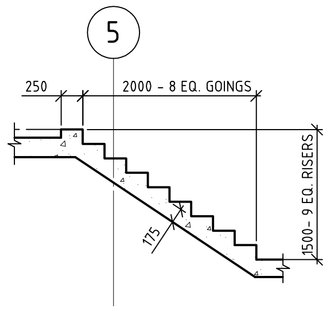

DETAIL D
SCALE 1:50

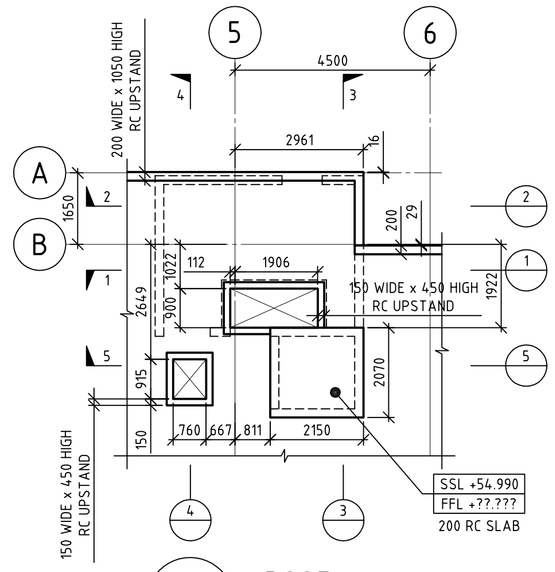

ROOF
SCALE 1:100
SSL +53.795
FFL +??.???
225 RC SLAB

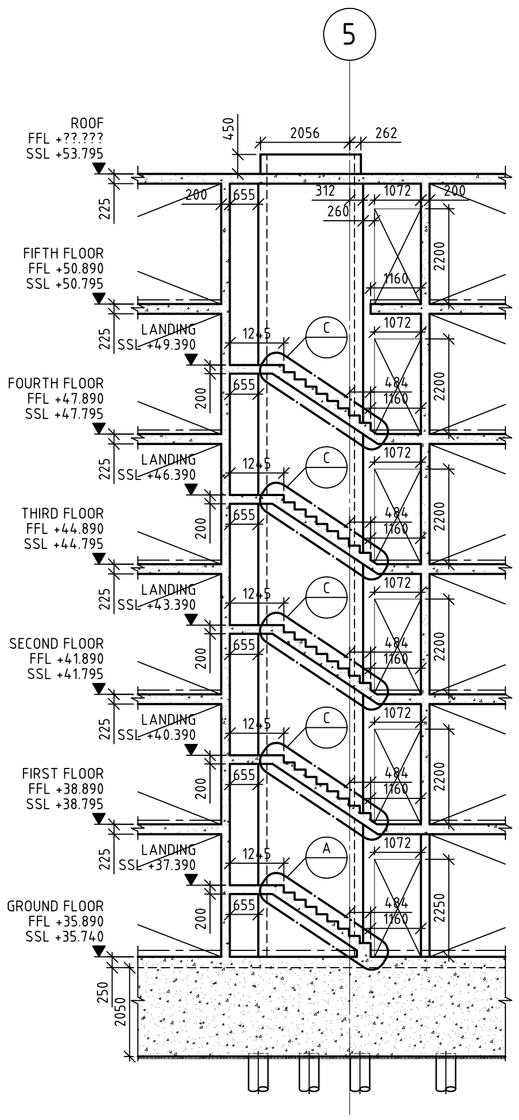

1 SECTION
SCALE 1:100

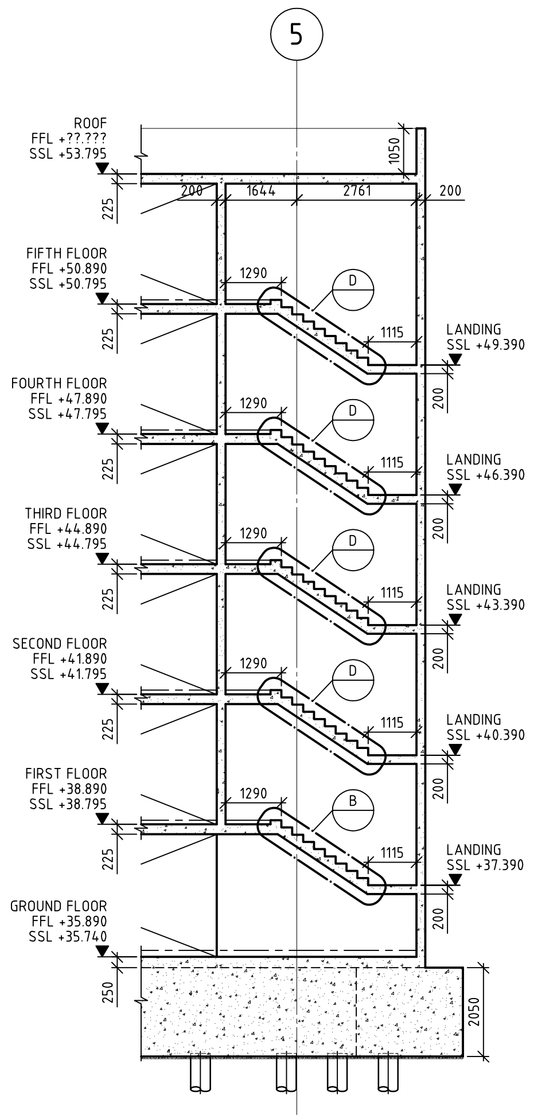

2 SECTION
SCALE 1:100

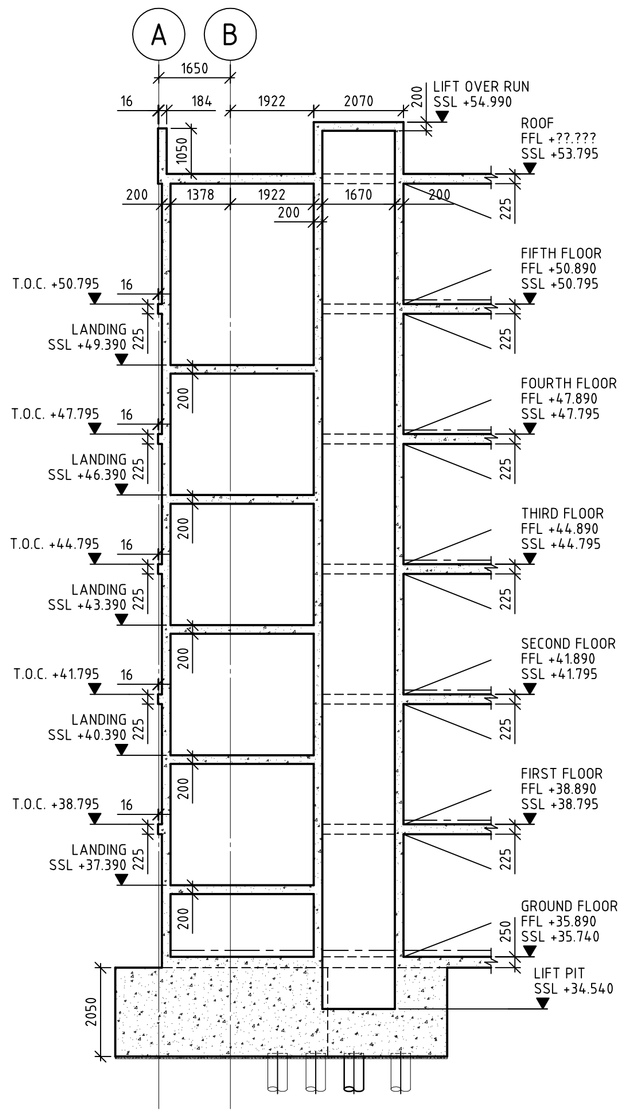

3 SECTION
SCALE 1:100

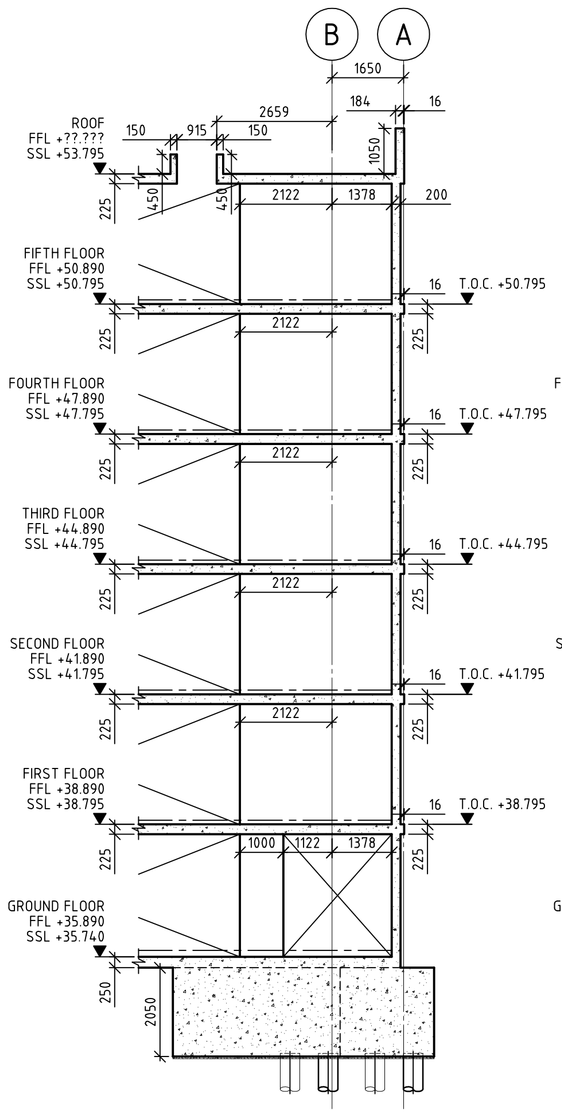

4 SECTION
SCALE 1:100

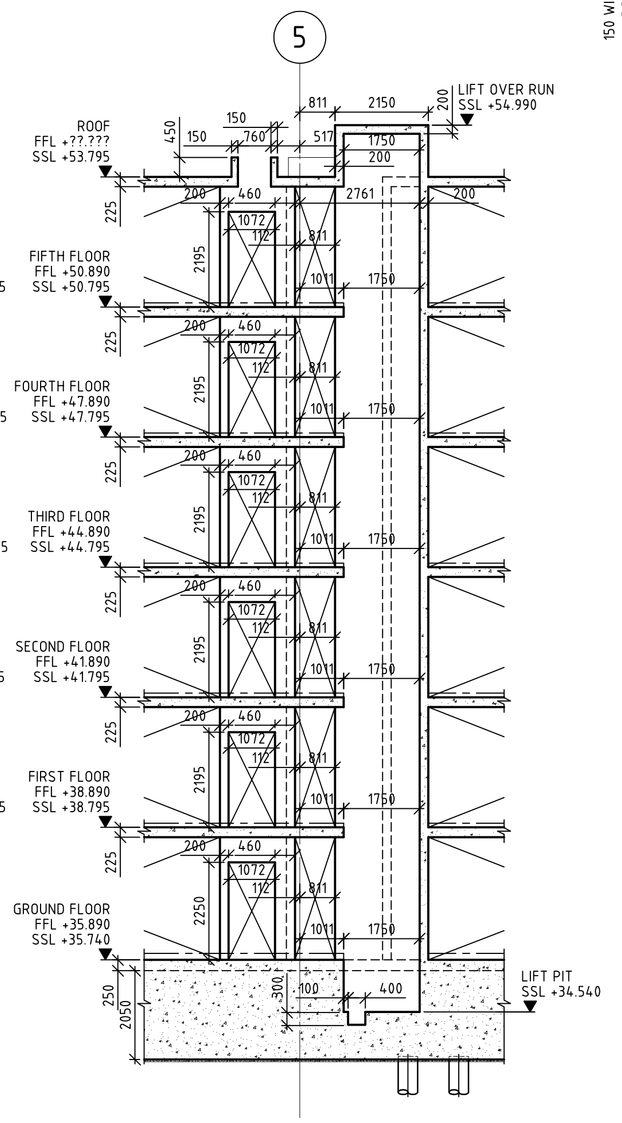

5 SECTION
SCALE 1:100

REV	DATE	DESCRIPTION	BY
P1	31/07/15	COORDINATION ISSUE	GG

DRG STATUS
PRELIMINARY

CLIENT
WATES LIVING SPACE

PROJECT
ABBEY AREA REDEVELOPMENT
LONDON NW6

DRG TITLE
BLOCK A
STAIR CORE SECTIONS & DETAILS

Manhire Associates
CONSULTING ENGINEERS
Manhire Associates Limited
Consulting Engineers
Ansell House
119 - 125 Ewell Road
Surbiton, Surrey, KT6 6AL
T: +44 20 8390 9097
F: +44 20 8390 7888
E: enquires@manhireassociates.co.uk

PROJECT NO	DRG NO	REV	SCALE	1:100
13050	BLA_S45	P1	DRN. GG	DATE JUN 15