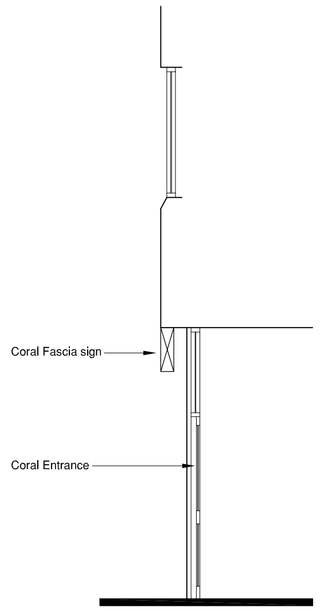

PROPOSED SECTION THROUGH ENTRANCE

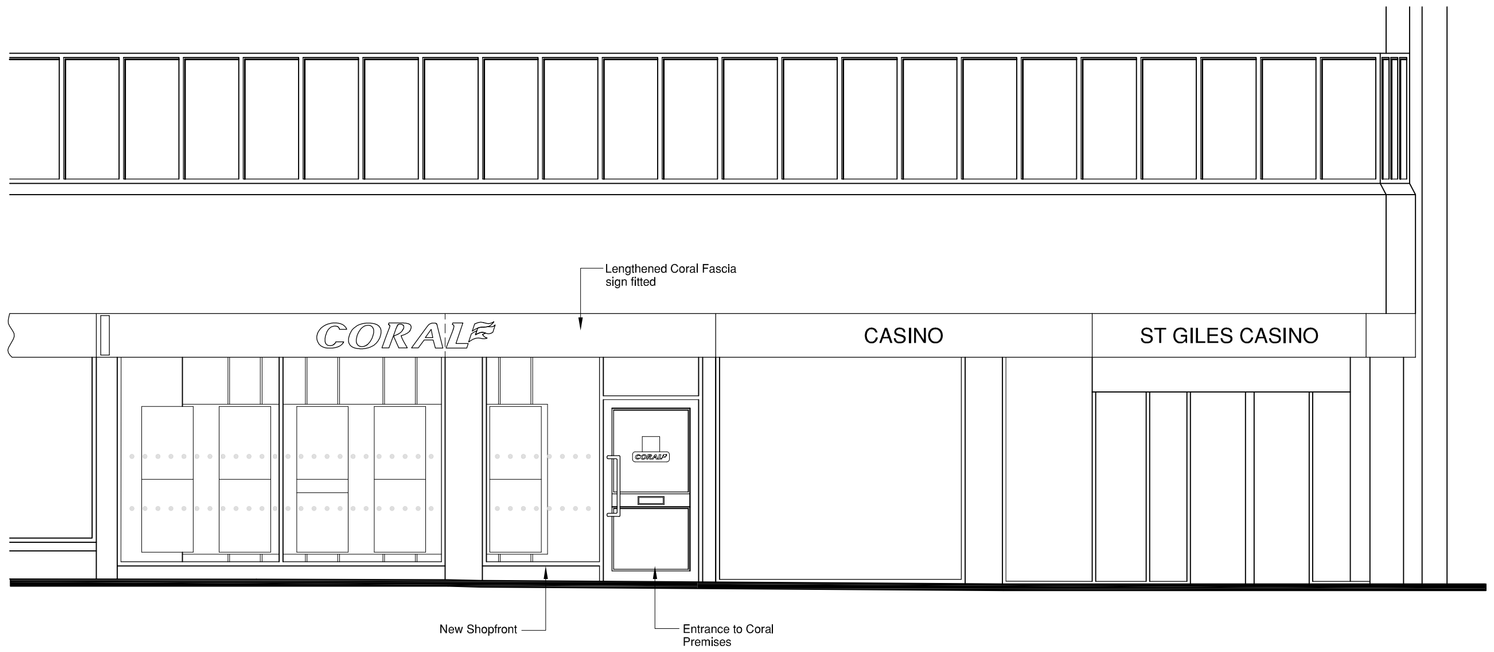

PROPOSED SHOPFRONT ELEVATION

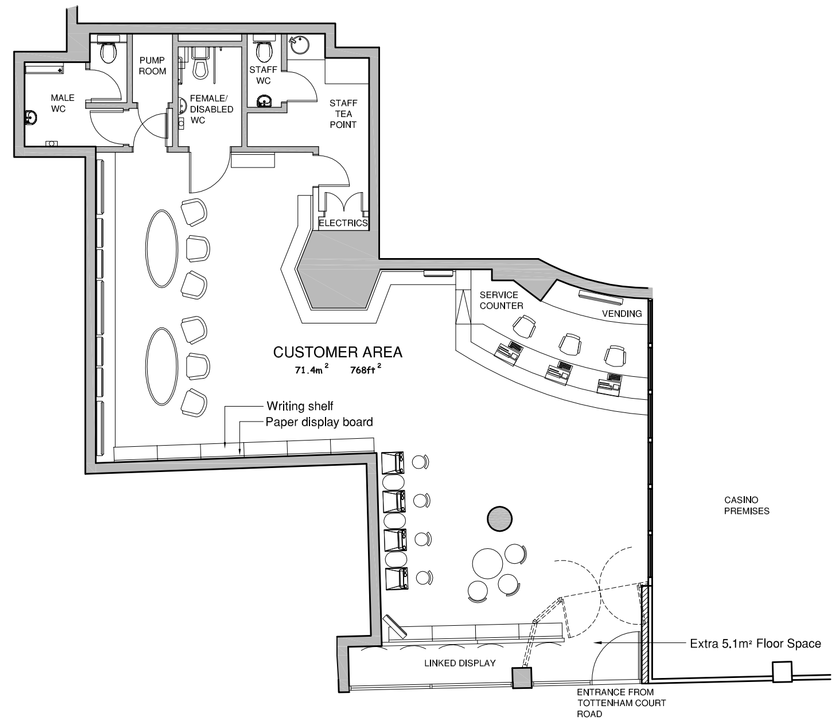

PROPOSED CORAL SHOP LAYOUT
1:100

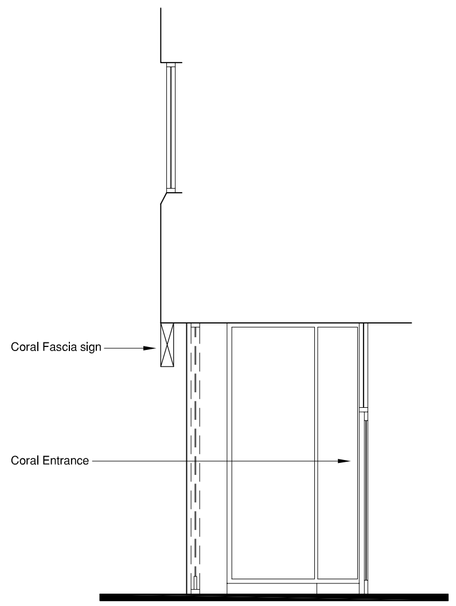

EXISTING SECTION THROUGH ENTRANCE

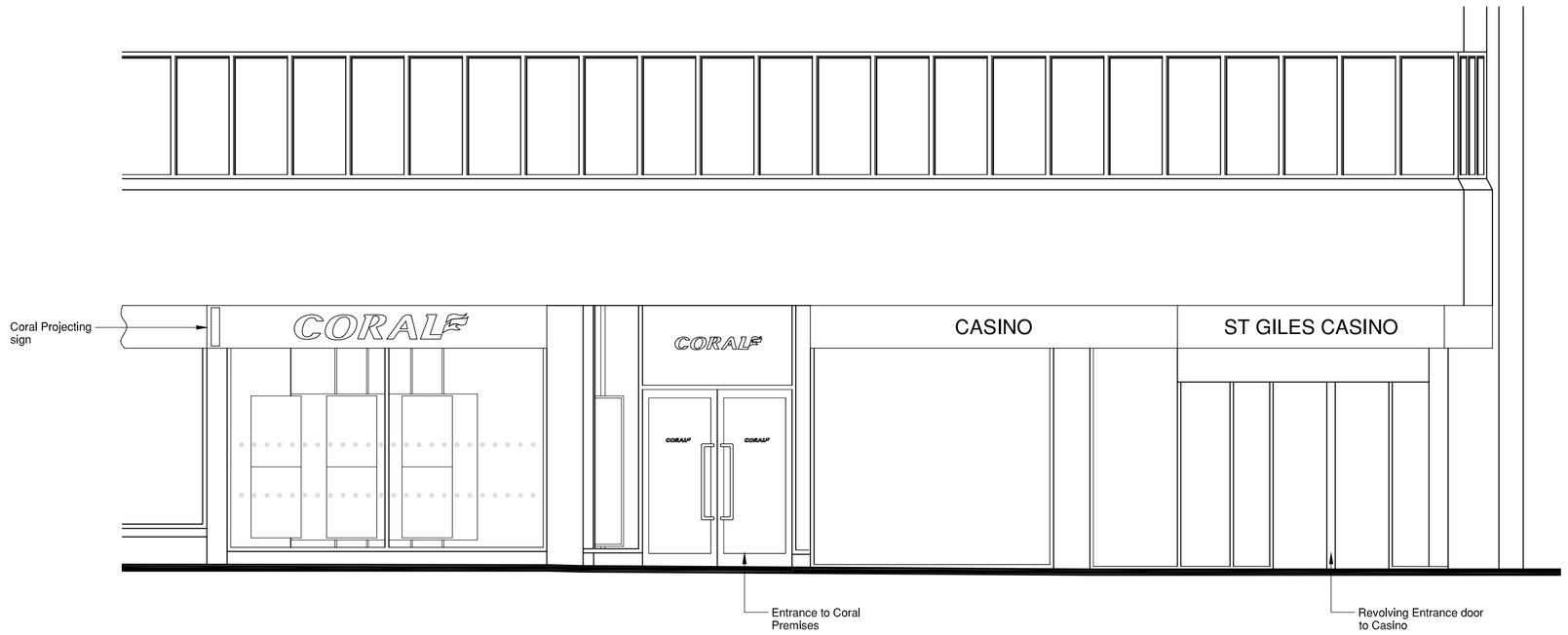

EXISTING SHOPFRONT ELEVATION

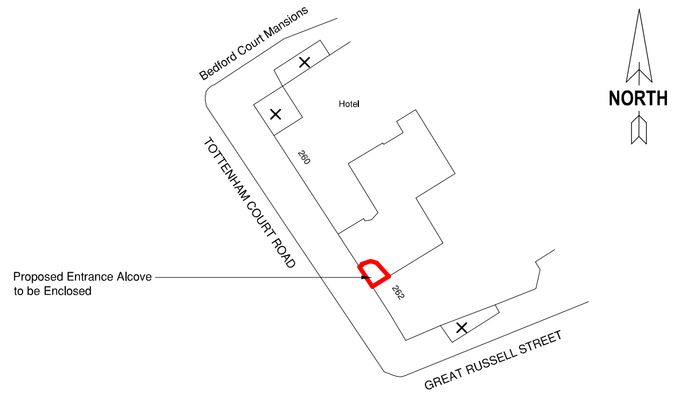

BLOCK PLAN 1:500

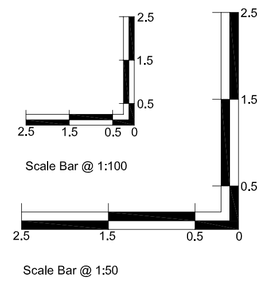

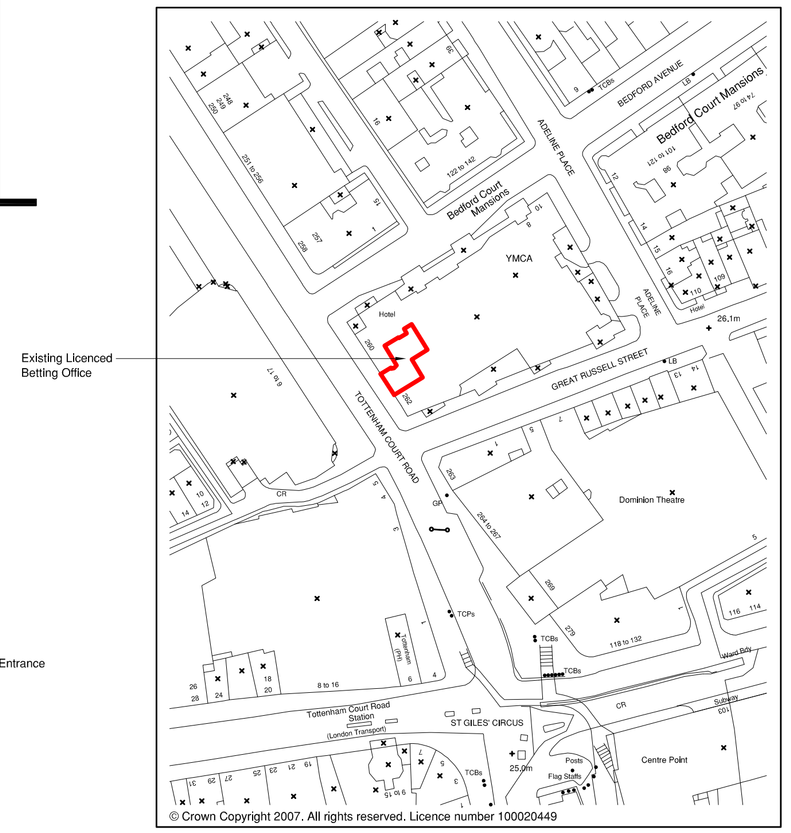

SITE LOCATION PLAN 1:1250

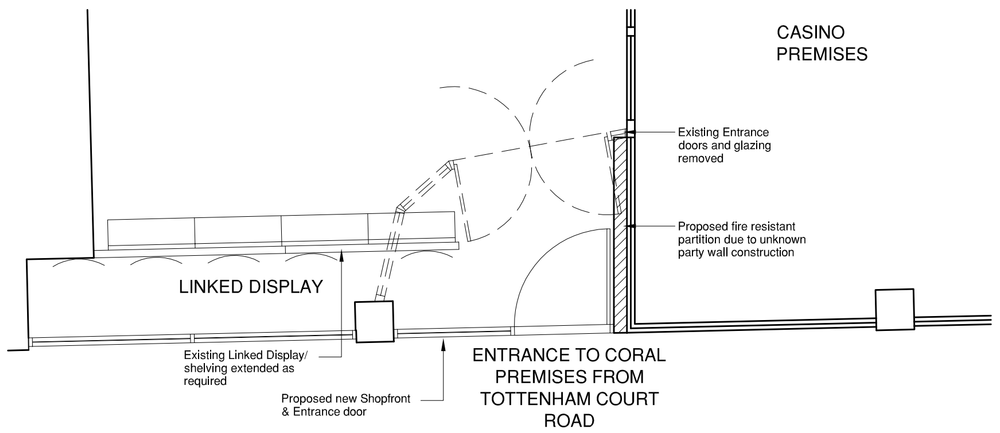

PROPOSED SHOPFRONT PLAN

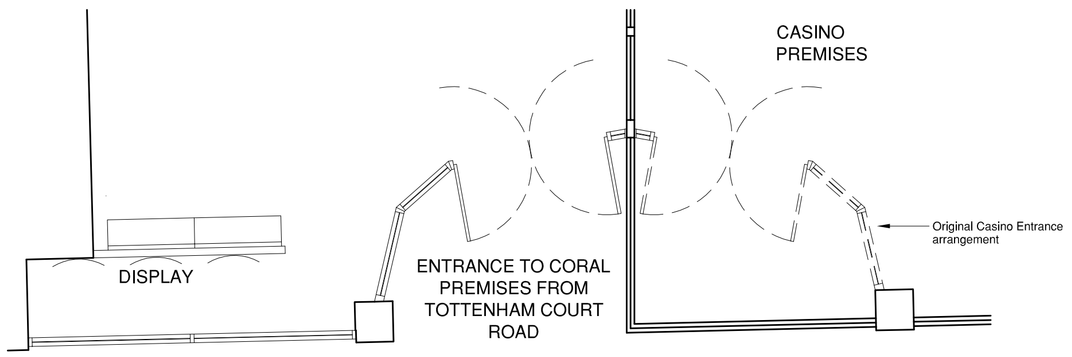

EXISTING SHOPFRONT PLAN

Revision	Date	Rev
.	.	.

Client
CORAL

Project
262 TOTTENHAM COURT ROAD, LONDON. W1T 7RG

Title
PLANNING DRAWING

Scale 1:50,100 @ A1 Date JULY 2015

Drawn By NMP Checked By .

Dwg. No. 14/3929/01 Rev. .

Eaton Strevens Associates
CHARTERED SURVEYORS
Suite 9
Parkside Business Centre.
Plumpton Road,
Hoddesdon, Herts.
EN11 0ES
Tel: 01992 639782/637510
Fax: 01992 640364
Email: enquiries@eatonstrevens.co.uk
RICS

File Path Z:\Coral\3929 - 262 Tottenham Court Road\Drawings\Planning DWG 01

© This drawing is the copyright of Eaton Strevens Associates.