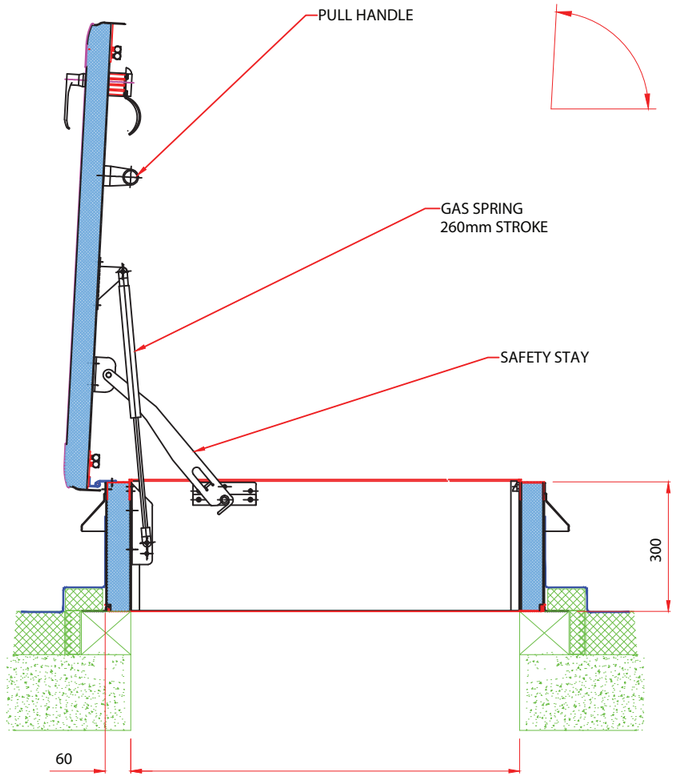
PULL HANDLE
GAS SPRING
260mm STROKE
SAFETY STAY
300
60

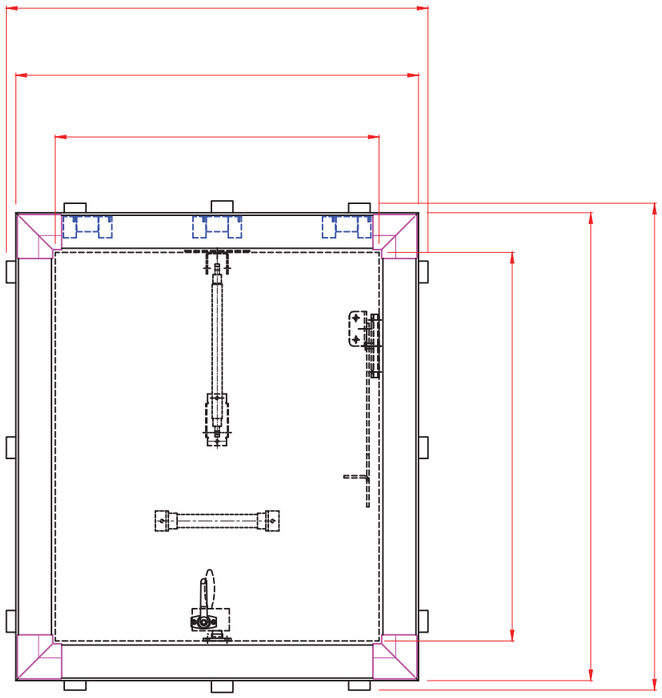

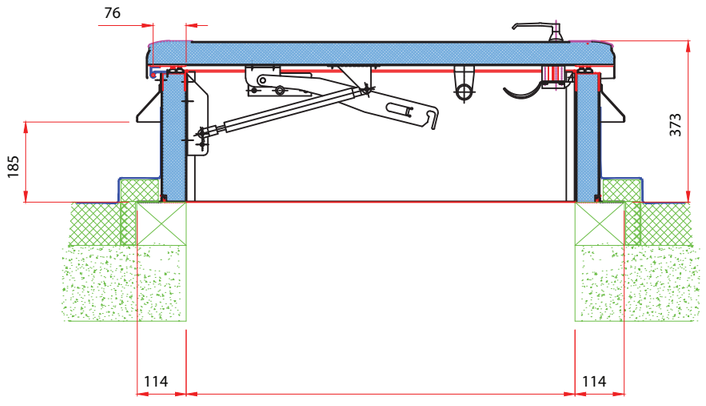
76
185
373
114
114

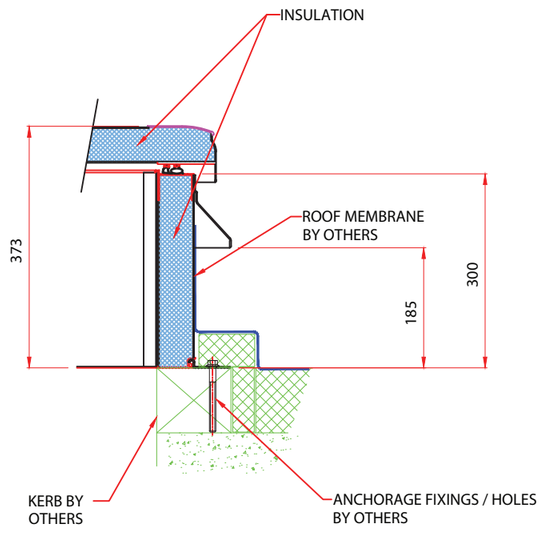
INSULATION
ROOF MEMBRANE
BY OTHERS
373
300
185
KERB BY
OTHERS
ANCHORAGE FIXINGS / HOLES
BY OTHERS