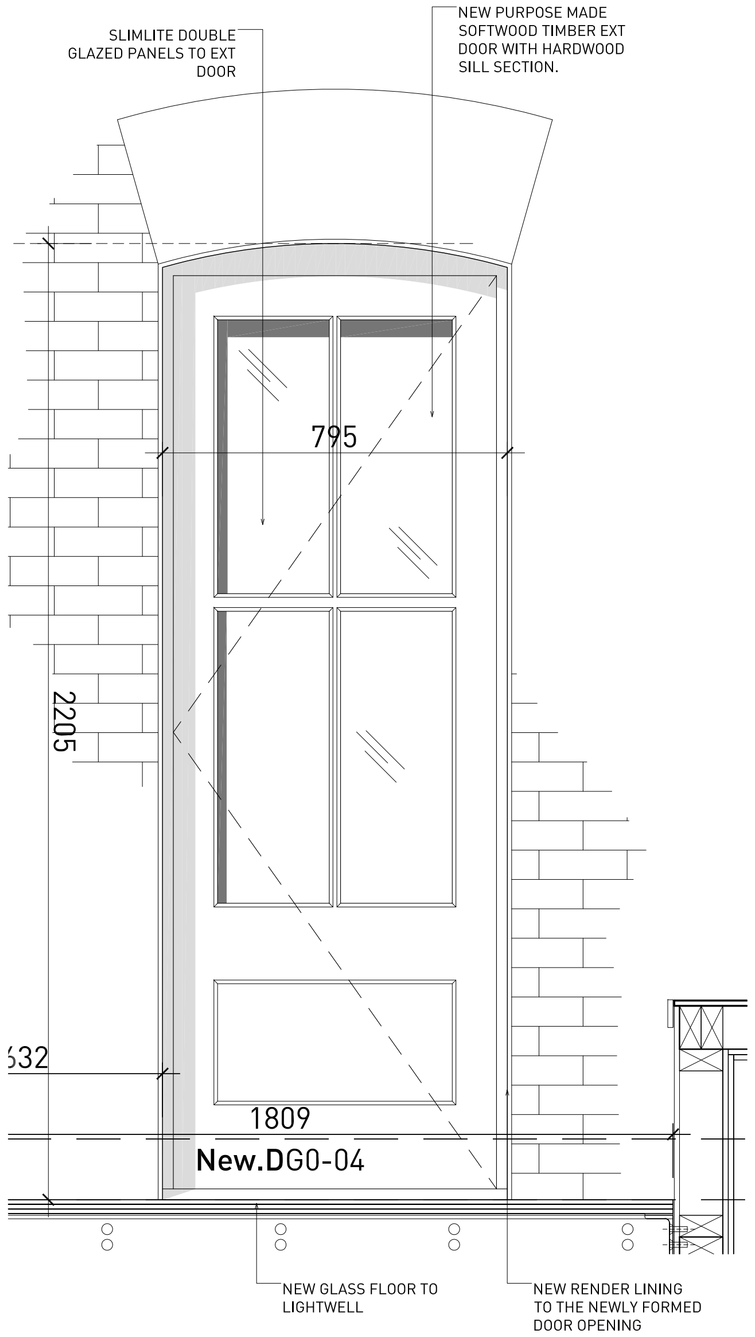

01	EXT DOOR ELEVATION DG0-04	SCALE	1:10

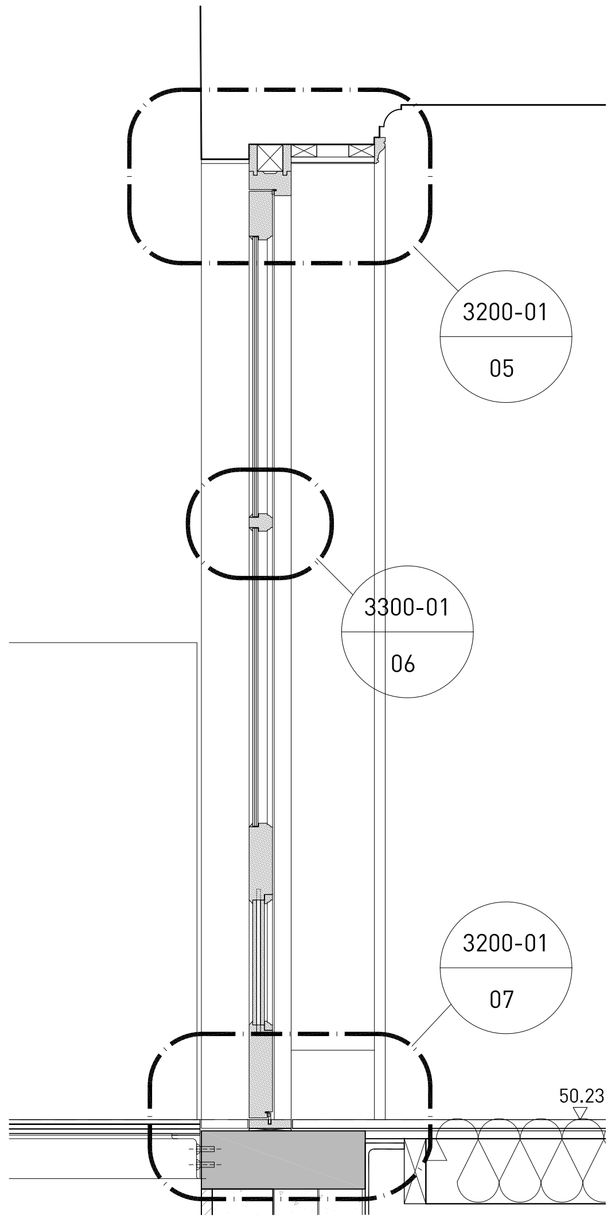

03	EXT DOOR SECTION DG0-04	SCALE	1:10

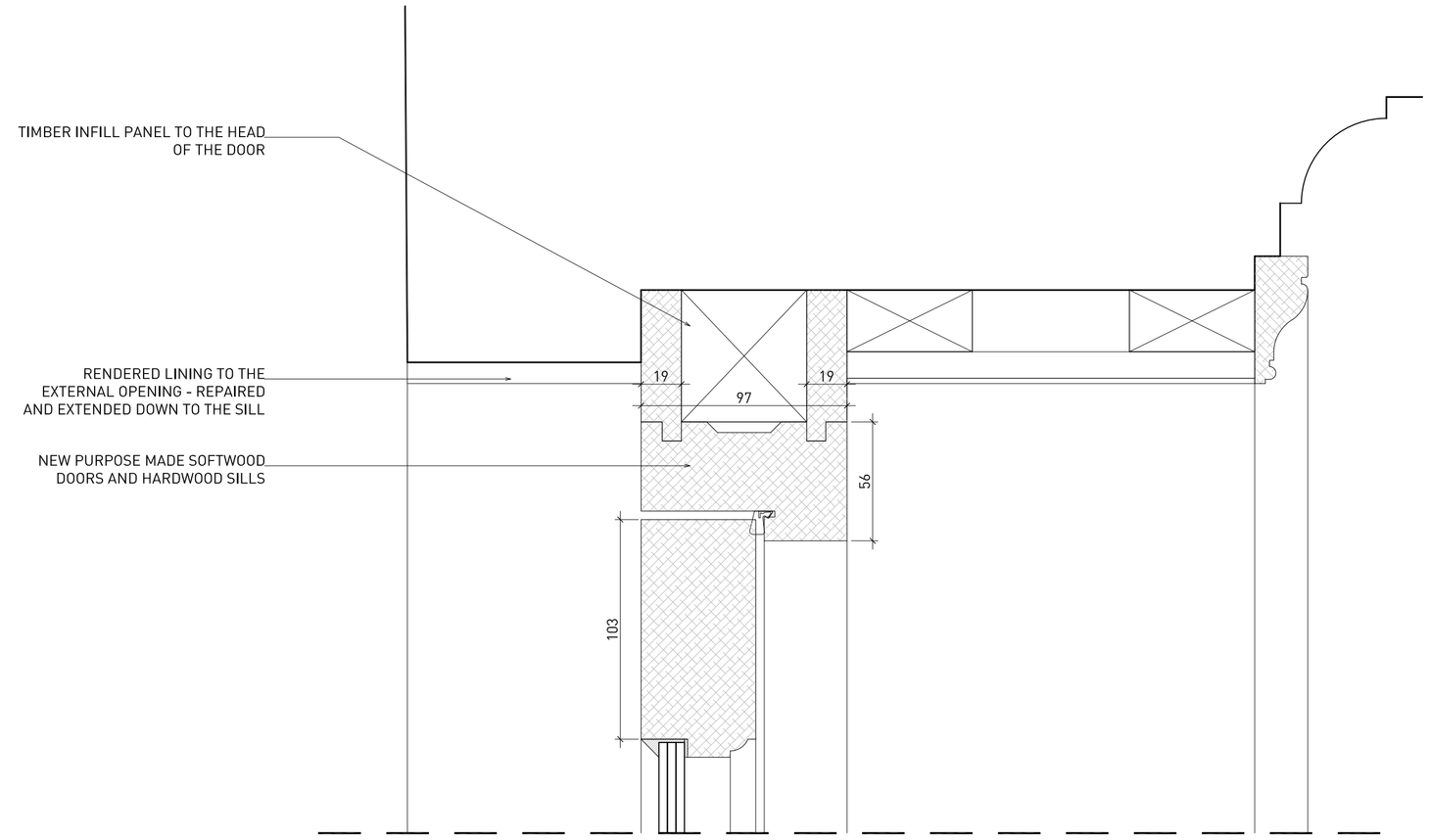

05	EXTERNAL DOOR HEAD DG0-04	SCALE	1:2

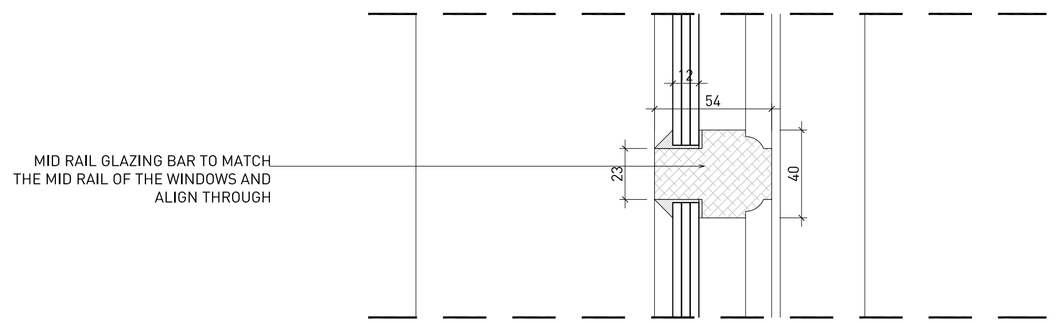

06	EXTERNAL DOOR MID-RAIL DG0-04	SCALE	1:2

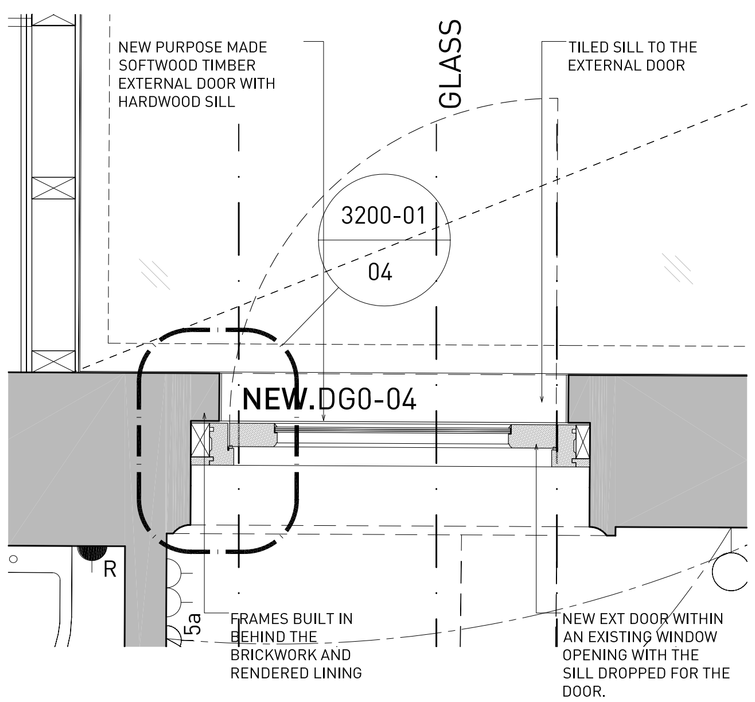

02	EXT DOOR PLAN DG0-04	SCALE	1:10

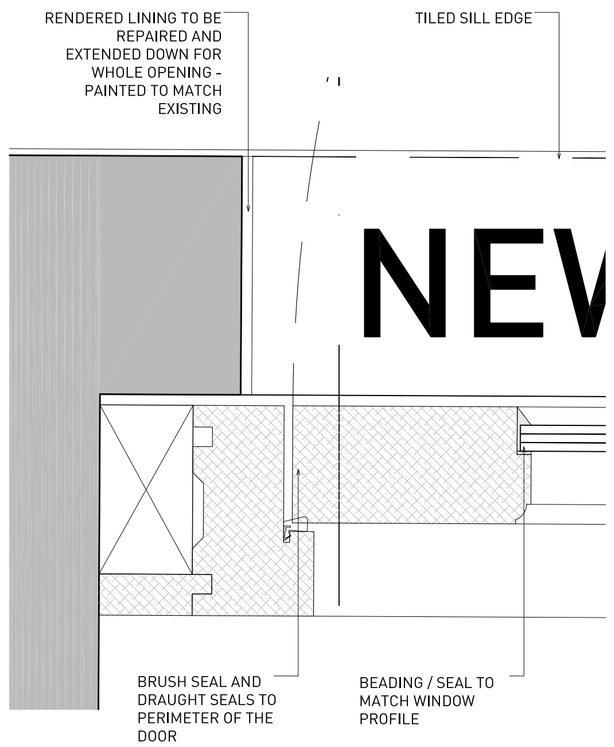

04	EXT DOOR DG0-04 - JAMB	SCALE	1:2

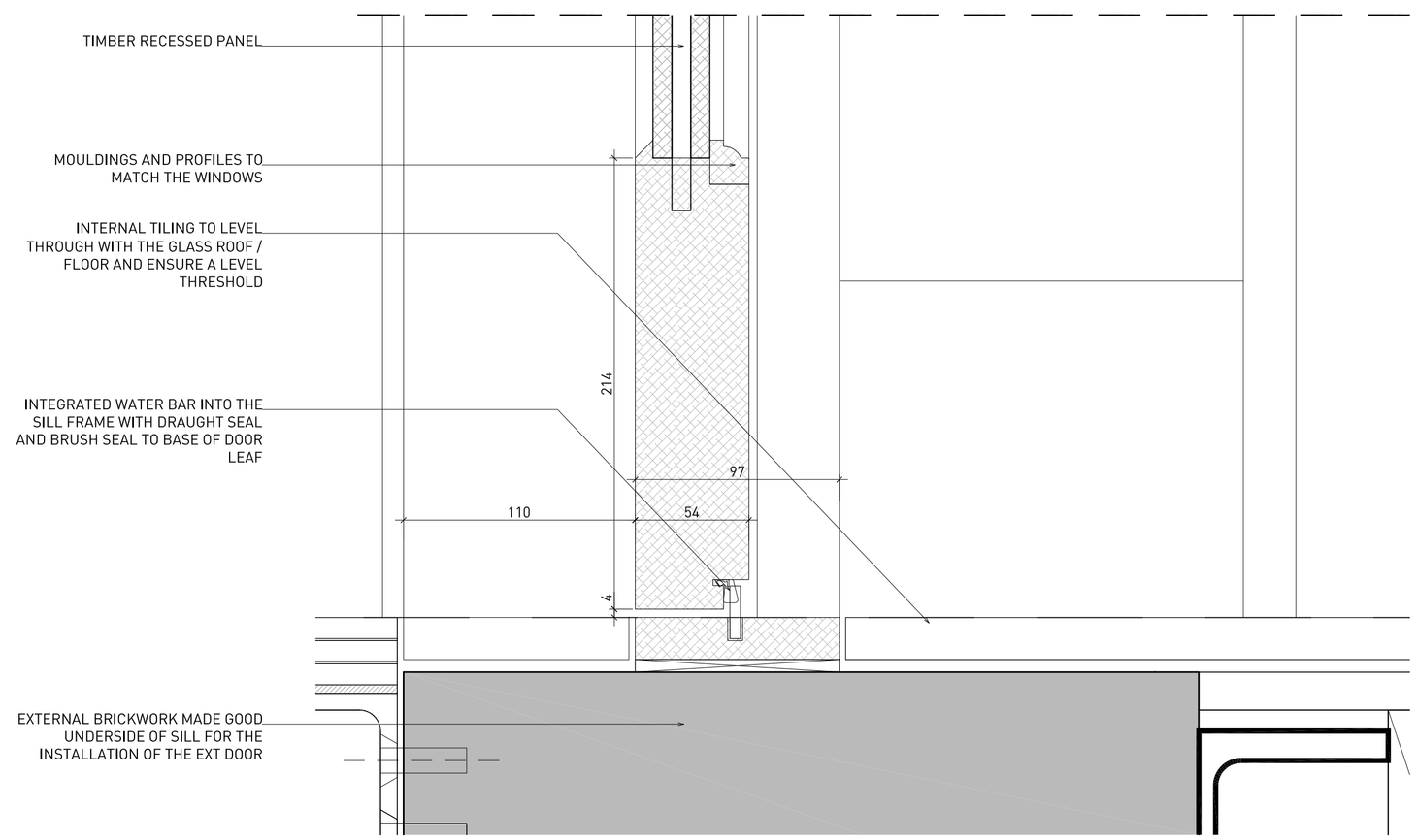

07	EXT DOOR DG0-04 - SILL	SCALE	1:2

© Copyright Fraher Architects
Do not scale from this drawing
All dimensions to be checked on site
Any discrepancies shall be immediately notified to the Architect in writing.

NOTES

1. ALL DIMENSIONS AND LEVELS ARE TO BE DETERMINED AND OR CHECKED BY THE CONTRACTOR ON SITE, SHOULD ANY DISCREPANCY BE IDENTIFIED BETWEEN THE DIMENSIONS, AND OR DETAILS DETERMINED ON SITE, AND THOSE SHOWN THOSE SHOWN ON THE RELEVANT DRAWINGS, THE ARCHITECT SHALL BE NOTIFIED IMMEDIATELY, AND HIS INSTRUCTIONS OBTAINED PRIOR TO THE COMMENCEMENT OF THE WORK.
2. HE CONTRACTOR SHALL BE RESPONSIBLE FOR THE DESIGN AND IMPLEMENTATION OF ALL TEMPORARY WORKS, AND THE SAFETY AND STABILITY OF THE NEW WORKS AND ADJACENT STRUCTURES DURING CONSTRUCTION.
3. WHERE A PRODUCT IS SPECIFIED TO BE OBTAINED FROM A MANUFACTURER OR SUPPLIER, THE CONTRACTOR SHALL INSTALL THE PRODUCT IN ACCORDANCE WITH THE INSTRUCTIONS SUPPLIED BY THE THE MANUFACTURER, SHOULD THERE BE ANY VARIATION BETWEEN THE WORK SPECIFIED ON THE DRAWINGS AND THE MANUFACTURERS INSTRUCTIONS, THE CONTRACTOR SHALL REFER THE MATTER TO THE ARCHITECT FOR INSTRUCTION BEFORE PROCEEDING.
4. DOOR FABRICATION INFORMATION TO BE SUBMITTED FOR APPROVAL BY THE CONSERVATION OFFICER ONCE JOINERY COMPANY COMMISSIONED FOR THE REPLACEMENT DOORS TO ENSURE CONTINUITY OF THE DETAILS.

P01	26.02.2015	ISSUED FOR PLANNING

REVISIONS

Project: 1433 Renovation

Client: Buddy Sultan

Location: 6 Perrin's Court
Hampstead
London
NW3 1QS

Fraher Architects
The Studio
14a Gabriel Street
London SE23 1DT
United Kingdom

Telephone
+44(0)20 8291 6947
Email
mail@fra-her.com
www.fra-her.com

Title: 3200 DOORS
NEW TERRACE DOOR

Status	Scale
Construction	1:2/10 @ A1

Drawn	Checked	Authorised
SD	JF	JF

Revision	Date
P01	26.02.2015

1 4 3 3 3 2 0 0 A C 0 0 1