124-132 Clerkenwell Road

Glossy Black Coloured render finishing

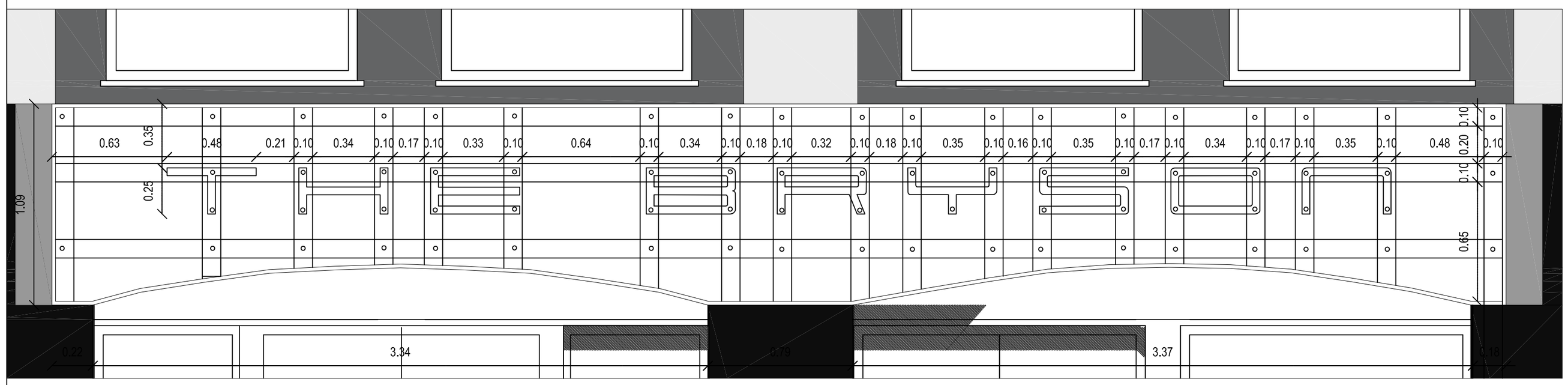

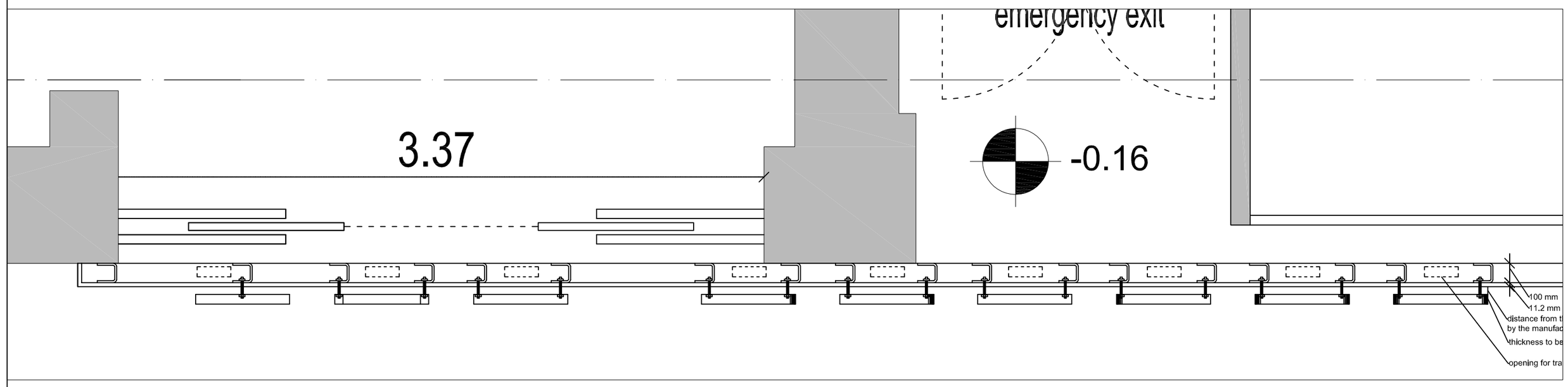

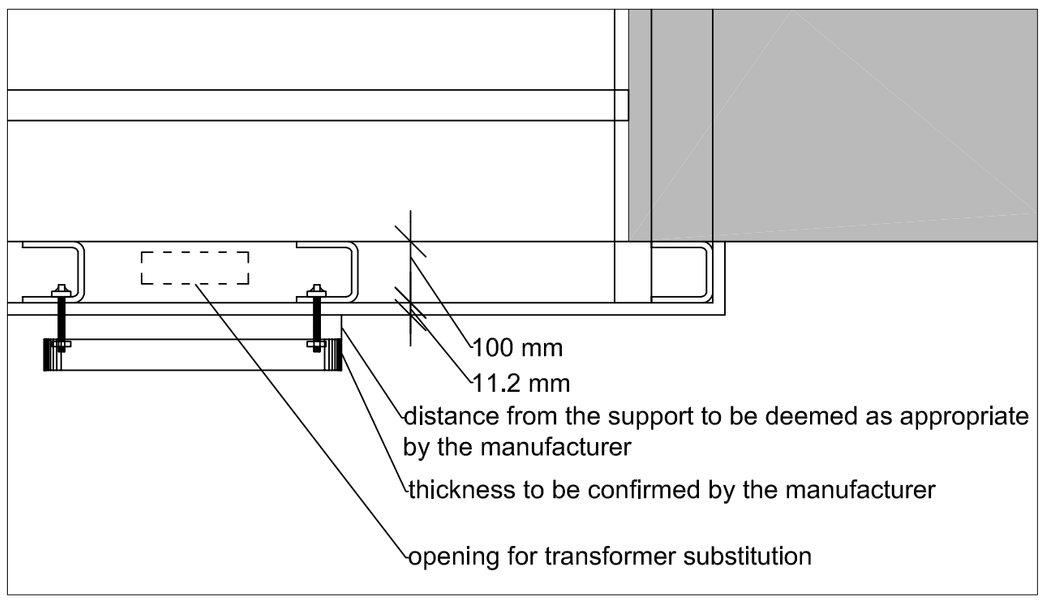

1. This drawing has been based upon a measured survey drawing by others. As a result, the precision of the dimensions Indicated Is dependent upon the Information supplied.

2. While this drawing can be used as a base drawing for construction purposes, it is VERY IMPORTANT that all dimensions are checked carefully before any work commences or any materials are ordered.

3. Where applicable, a suitable Structural Engineer and/or a Party Wall Surveyor should be consulted. Although as far as possible these Instances have been Indicated, this is not necessarily exhaustive and the whole scope of proposed works should be reviewed.

4. Unless other arrangements have been specifically made, your building contractor should serve a Building Notice, as and where applicable, to your local authority to satisfy the requirements of the Building Regulations. Your building contractor should also liaise with the Building Control Officer regarding routine Inspections of the work.

This Is a '**Detail Level Drawing**' and can be used as a basis for construction.

It Is Important to discuss all stages of your project with your architect and builder together, to ensure the appropriate level of detail is provided, see: Section G of the Services Menu.

Nonetheless, all dimensions must be checked on site and templates formed as appropriate to ensure that any manufactured item is correct for its application.

All dimensions are In millimetres
All dimensions to be checked on site

Emanuele Falsanisi - Biorarchitecture - Interior design
27 Leys Court, Brixton Road
London SW9 7RA
Tel: 0782 8066 739
Email: ef.bioarc@gmail.com

Project name:

Drawing name: Amended Elevation and Signage support drawings

Date:	Job no:	Drawing no:
Mar 2015		001-010 ES
Scale: 1:50, 1:20 and 1 : 10 @ A2	Revision:	Checked by: E F