Project	Standard Detail - Non-Illuminated Signage
Status	Current

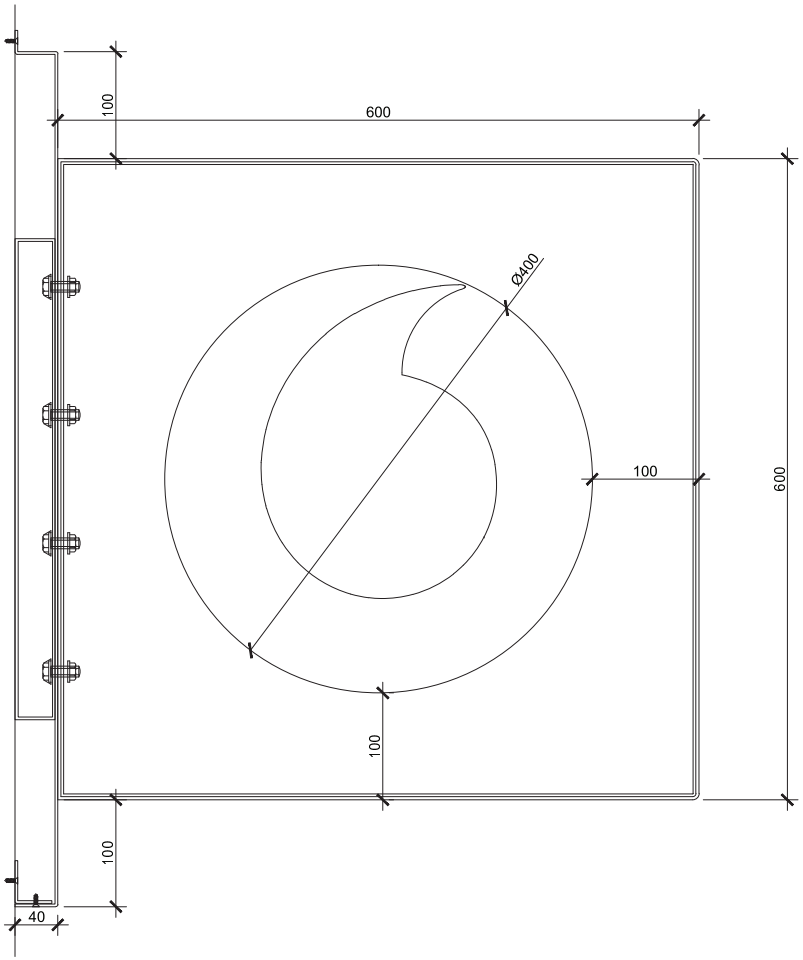

Projecting Sign Elevation

Scale: 1 : 5

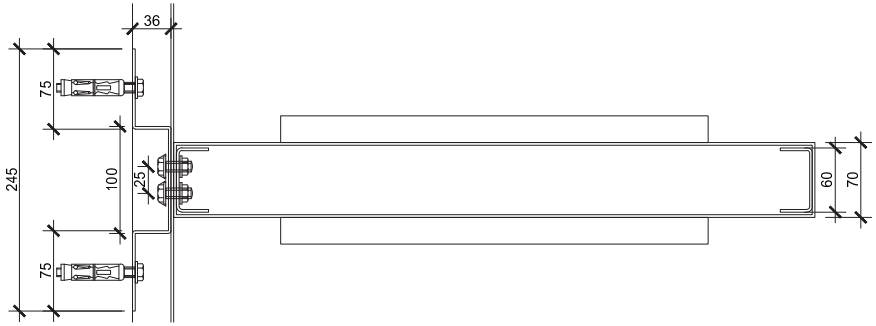

Projecting Sign Section

Scale: 1 : 5

Ø400 logo Projecting Sign
All Non-illuminated

Folded an welded 2.5mm aluminium panels finished red RAL 3020 satin.
Inner frame is 2.5mm aluminum, folded and welded construction (2 Peices)

5mm aluminium spacer plate finished red RAL 3020 satin sits between the inner frame of the sign and a 3mm thick mild steel inner fascia channel bracket which is fixed to the wall and has welded bolts to nut fix onto the inner frame of the sign.

Flat cut 25mm thick Trovidur roundel finished white satin.
Face applied icon logo print, laminated satin.
Bonded to the panel faces.

NO Illumination.

Note:
Required Projecting signage:

Ø400mm Roundel, casing 600 x 600mm
Ø350mm Roundel, casing 550 x 550mm
Ø300mm Roundel, casing 500 x 500mm
Ø250mm Roundel, casing 450 x 450mm
Ø200mm Roundel, casing 400 x 400mm

103.2

Shop	xx									Address	xx				
Title	Non-Illuminated Projecting Sign Detail										xx				
Drawn	KB	Date	18-07-14	Rev	-	Status	SD	Store Code	xxxxx	Format	XX	Scale	1:5	Size	A3

© This drawing is copyright of Vodafone Property

All dimensions are in millimeters
Do not scale from this drawing

Vodafone Property, Vodafone House, The Connection,
Newbury, Berkshire, RG14 2FN
TEL: (0)1635 33251 FAX: (0)1635 31127

vodafone