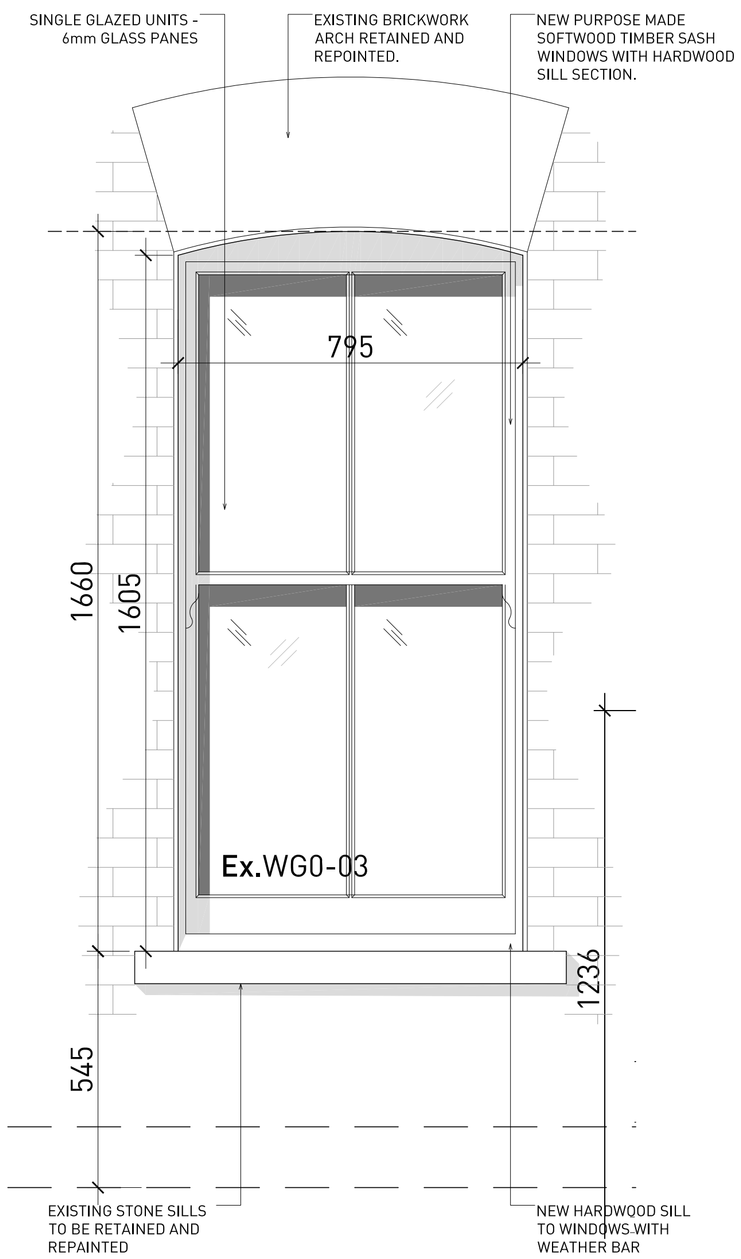

01	SASH WINDOW ELEVATION WG0-03	SCALE	1:10

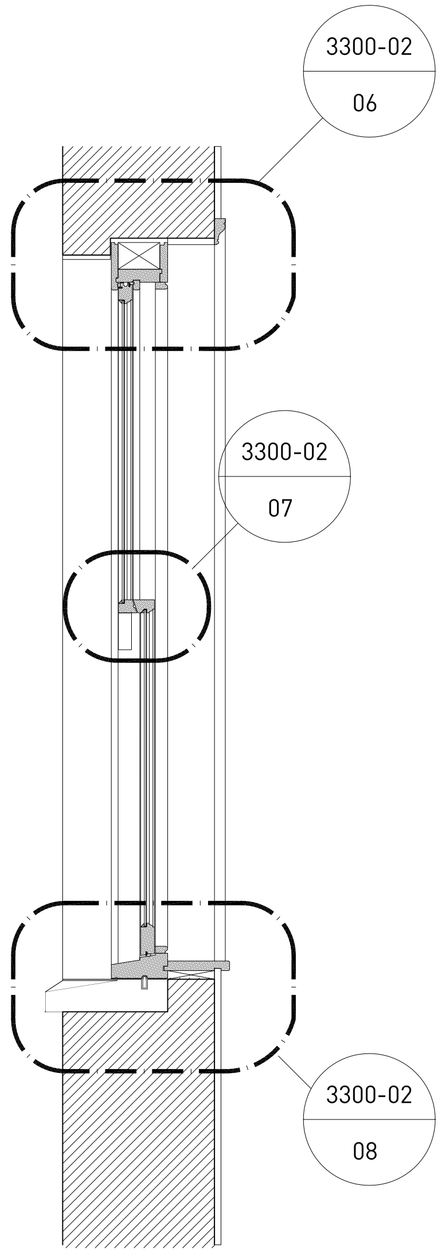

03	SASH WINDOW SECTION WG0-03	SCALE	1:10

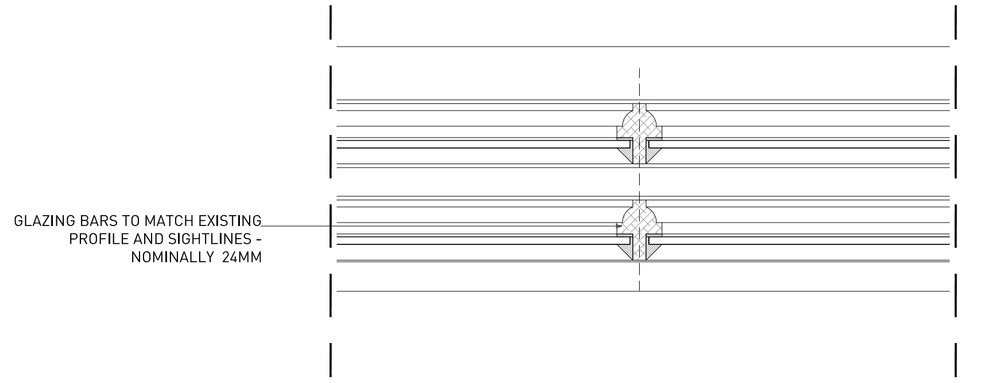

05	SASH WINDOW GLAZING BAR WG0-03	SCALE	1:2

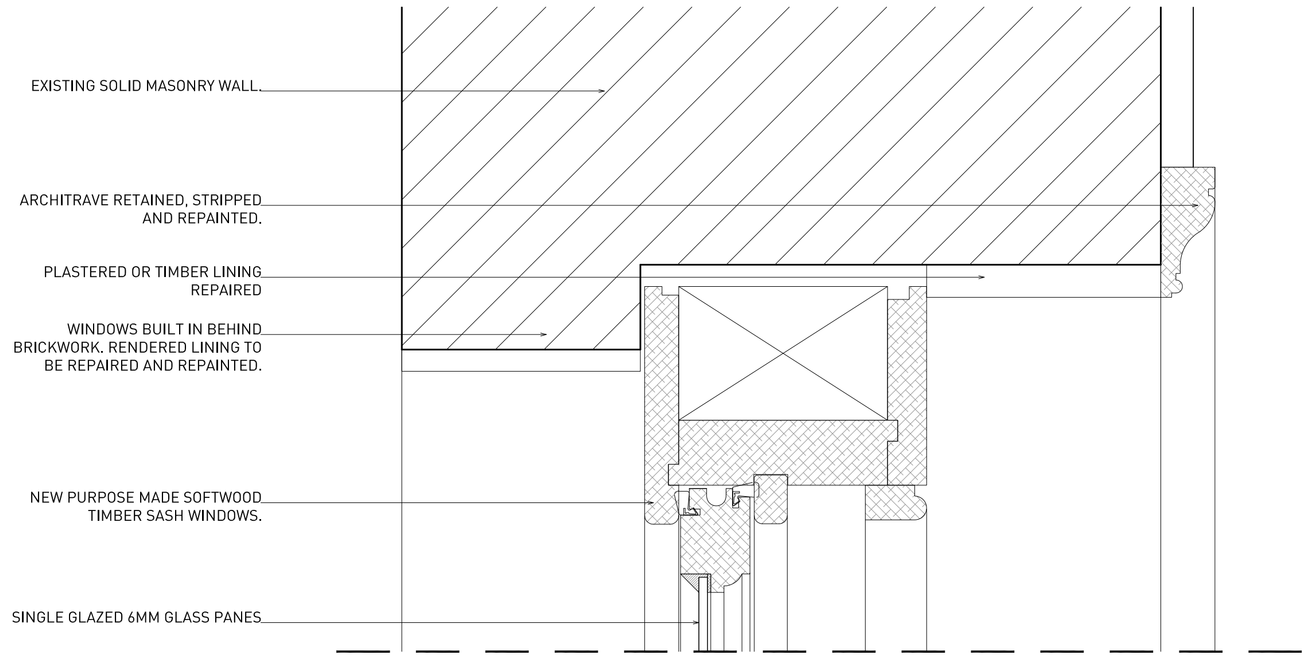

06	SASH WINDOW HEAD WG0-03	SCALE	1:2

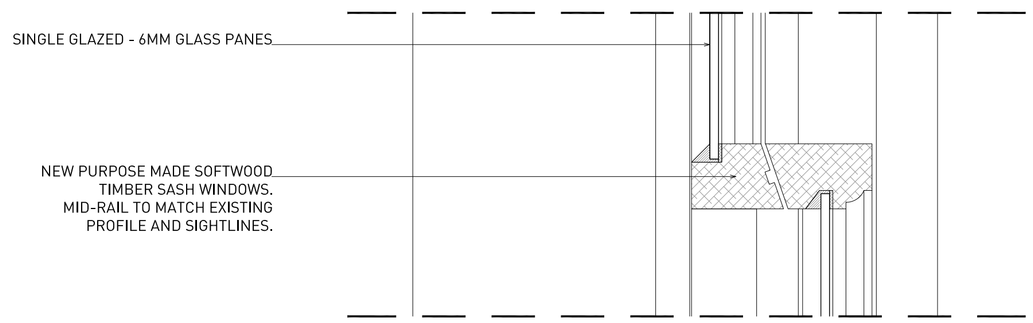

07	SASH WINDOW MID-RAIL DETAIL WG0-03	SCALE	1:2

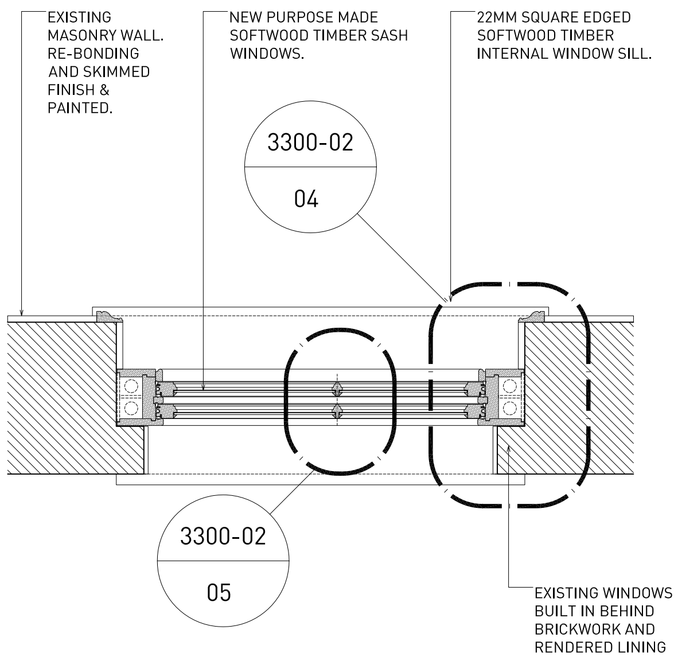

02	SASH WINDOW PLAN WG0-03	SCALE	1:10

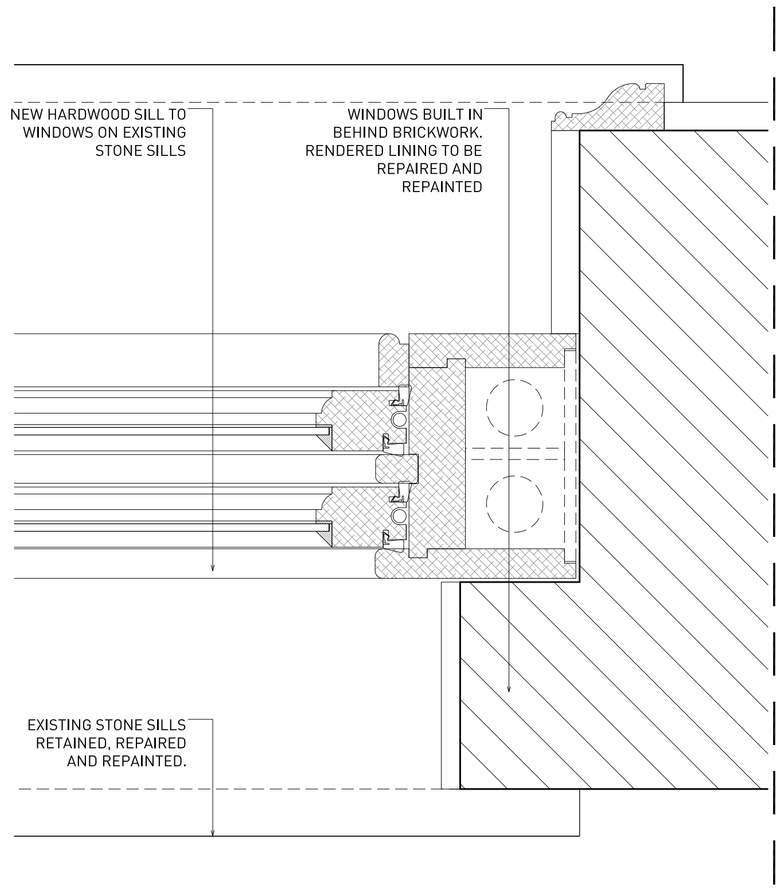

04	SASH WINDOW JAMB WG0-03	SCALE	1:2

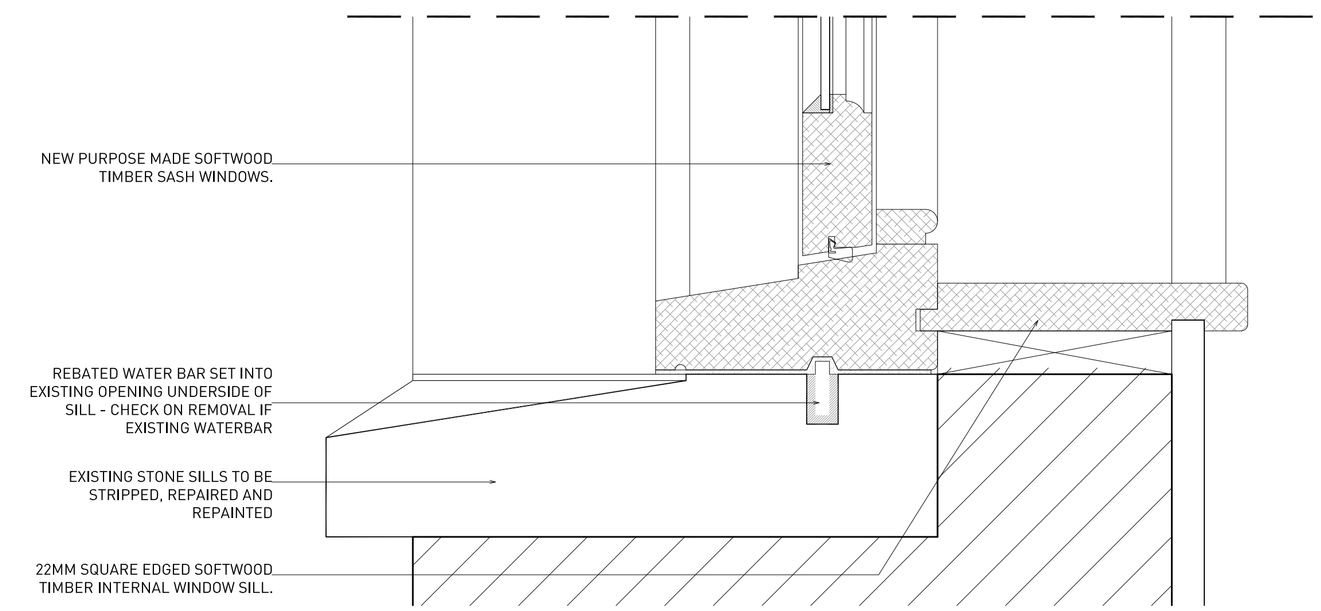

08	SASH WINDOW SILL WG0-03	SCALE	1:2

© Copyright Fraher Architects
Do not scale from this drawing
All dimensions to be checked on site
Any discrepancies shall be immediately notified to the Architect in writing.

NOTES

1. ALL DIMENSIONS AND LEVELS ARE TO BE DETERMINED AND OR CHECKED BY THE CONTRACTOR ON SITE, SHOULD ANY DISCREPANCY BE IDENTIFIED BETWEEN THE DIMENSIONS, AND OR DETAILS DETERMINED ON SITE, AND THOSE SHOWN THOSE SHOWN ON THE RELEVANT DRAWINGS, THE ARCHITECT SHALL BE NOTIFIED IMMEDIATELY, AND HIS INSTRUCTIONS OBTAINED PRIOR TO THE COMMENCEMENT OF THE WORK.
2. HE CONTRACTOR SHALL BE RESPONSIBLE FOR THE DESIGN AND IMPLEMENTATION OF ALL TEMPORARY WORKS, AND THE SAFETY AND STABILITY OF THE NEW WORKS AND ADJACENT STRUCTURES DURING CONSTRUCTION.
3. WHERE A PRODUCT IS SPECIFIED TO BE OBTAINED FROM A MANUFACTURER OR SUPPLIER, THE CONTRACTOR SHALL INSTALL THE PRODUCT IN ACCORDANCE WITH THE INSTRUCTIONS SUPPLIED BY THE THE MANUFACTURER, SHOULD THERE BE ANY VARIATION BETWEEN THE WORK SPECIFIED ON THE DRAWINGS AND THE MANUFACTURERS INSTRUCTIONS, THE CONTRACTOR SHALL REFER THE MATTER TO THE ARCHITECT FOR INSTRUCTION BEFORE PROCEEDING.
4. TYPICAL WINDOW DETAILS SUBJECT TO SURVEY BY WINDOW FABRICATOR AND CONFIRMATION OF CRITICAL DIMENSIONS. INFORMATION SHOWN IS FOLLOWING INITIAL GUIDANCE AND PERIOD DETAILING OF SIMILAR WINDOWS.
5. WINDOW FABRICATION INFORMATION TO BE SUBMITTED FOR APPROVAL BY THE CONSERVATION OFFICER ONCE JOINERY COMPANY COMMISSIONED FOR THE REPLACEMENT WINDOWS.

P01	18.02.2015	ISSUED FOR PLANNING

REVISIONS

Project: 1433 Renovation

Client: Buddy Sultan

Location: 6 Perrin's Court
Hampstead
London
NW3 1QS

Fraher Architects
The Studio
14a Gabriel Street
London SE23 1DT
United Kingdom

Telephone
+44(0)20 8291 6947
Email
mail@fra-her.com
www.fra-her.com

Title: TYPICAL WINDOW DETAILS SIDE WINDOWS

Status: Construction | Scale: 1:2/10 @ A1

Drawn: SD | Checked: JF | Authorised: JF

Revision: P01 | Date: 18.02.2015

1 4 3 3 3 3 0 0 A C 0 0 2