Original soffit line to be made good after removal of screen, partition and downlighters

1 hour fire resisting infill studwork formed with 100 x 50mm studs and 2 layers of 10mm Glasroc F Multiboard each side. Seal around perimeter with intumescent sealant

12mm thick x 83mm hardwood capping piece with rounded edges

Form top frame with 2 pieces of 75 x 75mm hardwood sections rebated for shadow gap as shown

147 x 47mm Hardwood window frame profiled as shown with planted bead Lorient LG1720, 21 x 17mm with top splay at 15 degrees. Beads to be screwed to frame using No.8 x 45mm screws at nominal 200mm centres

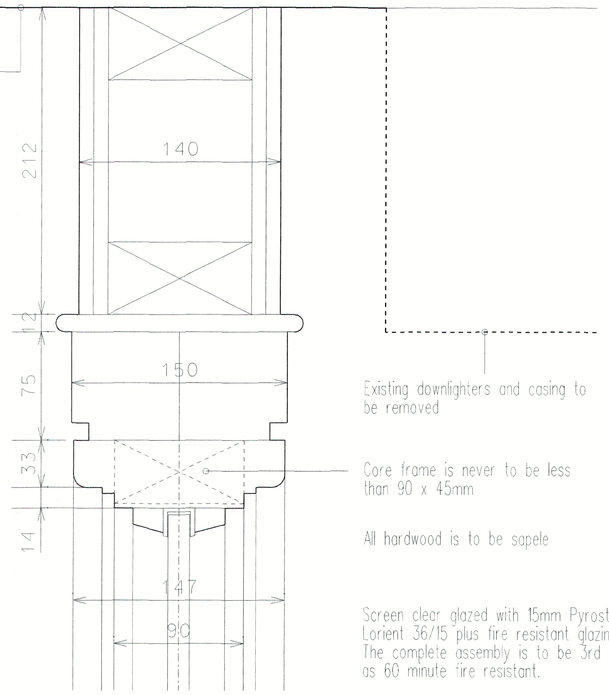

Existing downlighters and casing to be removed

Core frame is never to be less than 90 x 45mm

All hardwood is to be sapele

Screen clear glazed with 15mm Pyrostop in Lorient 36/15 plus fire resistant glazing system. The complete assembly is to be 3rd party certified as 60 minute fire resistant.

HEAD DETAIL

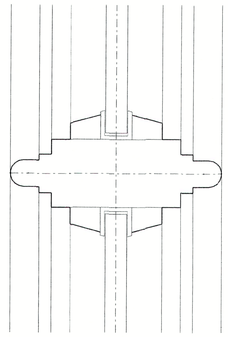

147 x 47mm hardwood mullion profiled as shown with planted bead Lorient LG1720, 21 x 17mm splayed at 15 degrees as for jamb

TRANSOME DETAIL

Screen clear glazed with 15mm Pyrostop in Lorient 36/15 plus fire resistant glazing system. The complete assembly is to be 3rd party certified as 60 minute fire resistant.

147 x 47mm hardwood window frame profiled as shown with planted bead Lorient LG1720, 21 x 17mm with top splay at 15 degrees. Beads to be screwed to frame using No.8 x 45mm screws at nominal 200mm centres

Packing / plinth formed with 2 pieces of 75 x 75mm hardwood sections rebated for shadow gap as shown

12mm thick x 83mm hardwood capping piece with rounded edges

1 hour fire resisting stall riser studwork formed with 100 x 50mm studs and 2 layers of 10mm Glasroc F Multiboard each side. Seal around perimeter with intumescent sealant

Hardwood skirting to match existing and finished with French polish

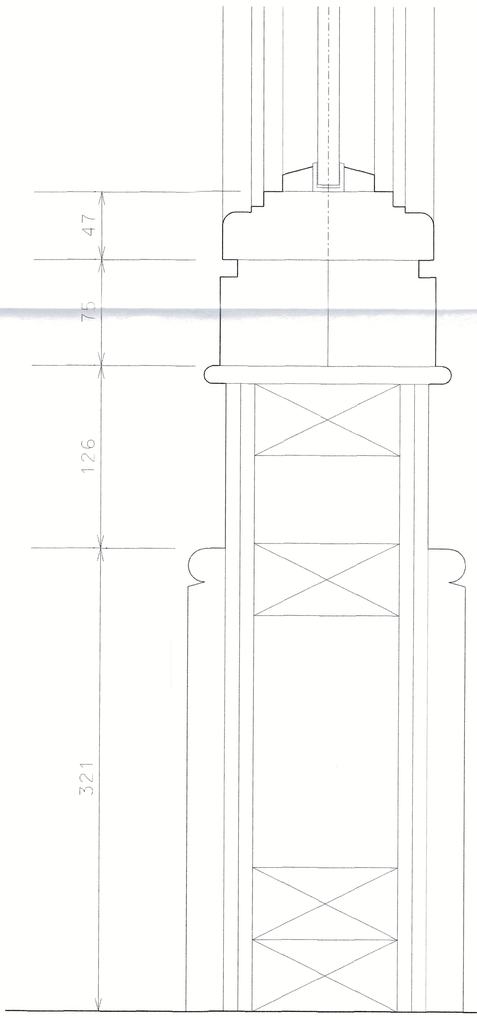

THRESHOLD DETAIL

Cut back and make good to decking to new line

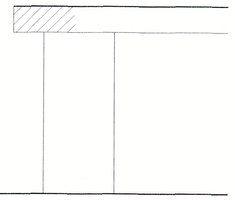

Form perimeter frame with 2 pieces of 75 x 75mm hardwood sections rebated for shadow gap as shown

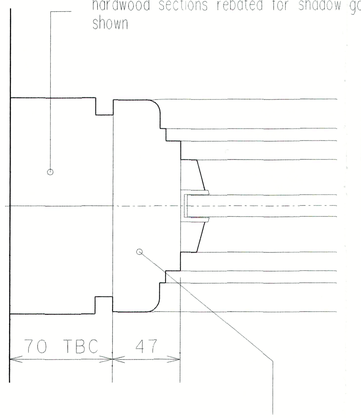

147 x 47mm hardwood window frame profiled as shown with planted bead Lorient LG1720, 21 x 17mm with top splay at 15 degrees. Beads to be screwed to frame using No.8 x 45mm screws at nominal 200mm centres

JAMB DETAIL

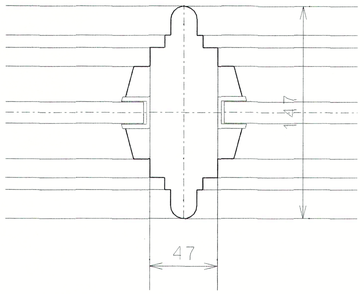

147 x 47mm hardwood mullion profiled as shown with planted bead Lorient LG1720, 21 x 17mm splayed at 15 degrees a for jamb

MULLION DETAIL

NOTES

THE CONTRACTOR AND HIS SUB-CONTRACTORS ARE TO VERIFY ALL DIMENSIONS ON SITE BEFORE MAKING SHOP DRAWINGS OR COMMENCING MANUFACTURE

AMENDMENTS

THE BRITISH MUSEUM

OPENING BETWEEN ROOM 2 AND GRENVILLE LIBRARY AT LEVEL 3 (BALCONY)

NEW GLAZED SCREEN

DETAILS

scale	date
A1: 1:2 A3:1:4	SEPT 2014

job no. 14-173

drawing no. AD 1/1

client

THE TRUSTEES OF THE BRITISH MUSEUM

FRANK TIMOTHY ASSOCIATES LIMITED
Chartered Architectural Technologist

Oakfields, 18 Piper Road, Yate
South Gloucestershire BS37 5SY

Telephone 01454 880395 Fax 01454 880396