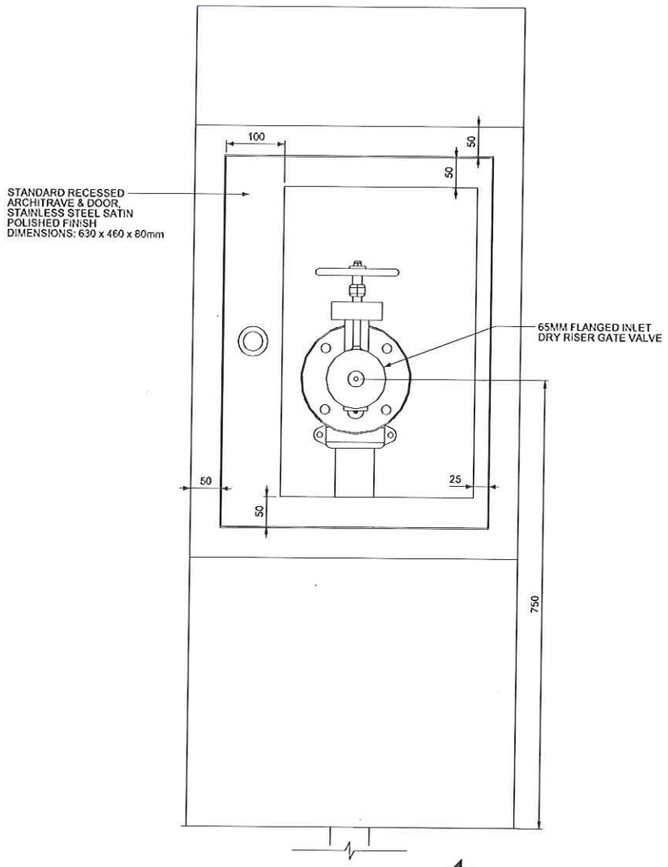

SECTION A

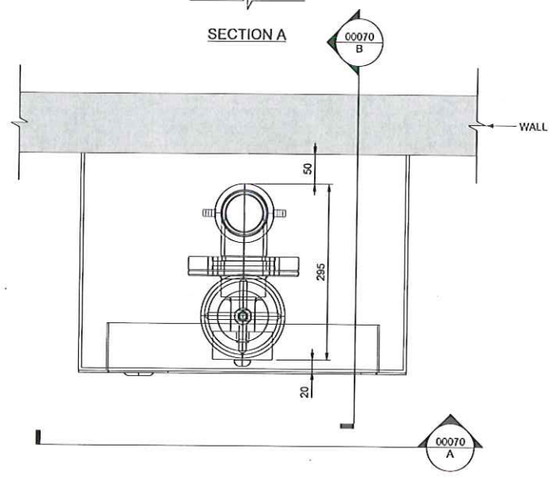

TOP VIEW

NOTE: DRY DROPPER OUTLET SHALL BE CLEARLY INDICATED ON THE INNER SURFACE OF THE DOOR.

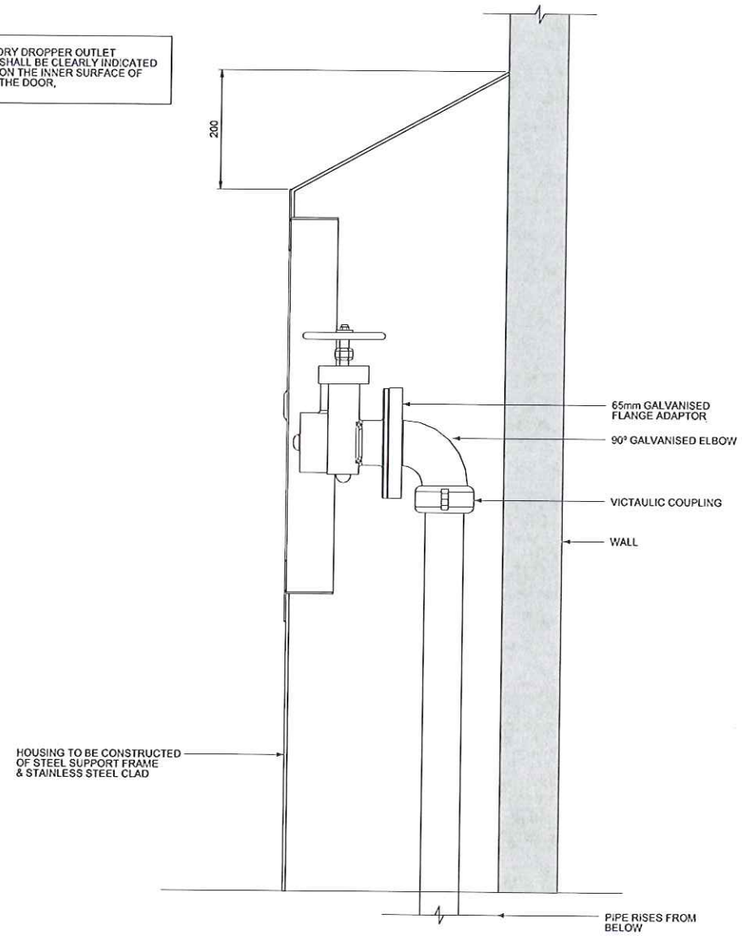

SECTION B

NOTES:

1) DO NOT SCALE FROM THIS DRAWING
2) ALL DIMENSIONS ARE IN MILLIMETRES UNLESS OTHERWISE STATED.
3) WHERE OUTLET IS TO BE SITED AGAINST A TUNNEL WALL THE CABINET IS TO BE FORMED TO FOLLOW THE CURVATURE OF THE WALL AGAINST WHICH IT IS POSITIONED.

FOR CONSTRUCTION

Rev	By	Revision	Desn	T Chkd	T Appd	Date
C01	JP	ISSUED FOR CONSTRUCTION	LC	LP	SC	27.03.13

Tube Lines
19 Westferry Circus
Canary Wharf
London E14 4HD

Technical Contractor

Stage: CONSTRUCTION

Discipline: FIRE

Line: JUBILEE, NORTHERN, PICCADILLY — Location Code: L001

Location: JNP INFRACO - GENERAL

Site/Project: STANDARD DETAIL

Title: DRY DROPPER DETAIL

Drawn: J PIPER	Date: 21/02/2013
Designed: L CORBETT	Technical Approved: S CORSTORPHINE
Technical Checked: L PRESSWELL	Project Approved:
Grid: N/A	PER Doc No:
Project Document Code:	
Scale: 1:5 @ A1	Sheet Number: 1 of 1

Drawing No	Rev
TLL-L001-FUNC-FIR-DRW-00070	C01

CAD DRAWING CHANGE ON CAD ONLY

© Tube Lines Limited
All rights reserved. No part of this publication may be reproduced or transmitted in any form or by any means (including photocopying and recording) without the written permission of the copyright holder. The written permission of the copyright holder must also be obtained before any part of this publication is stored in a retrieval system of any nature.
WARNING: The doing of an unauthorised act in relation to a copyright work may result in a civil claim for damages and criminal prosecution.

A1 MICROFILM REF.

Plotted by: pipe8889 (Jake Piper) at: 27/03/2013 10:10 CAD file: TLL-L001-FUNC-FIR-DRW-00070.dgn

A1

Pen Table: overyorkV8.pen