This drawing is the property of Technical Signs and must not be reproduced in part or in full without prior consent of Technical Signs.

Existing

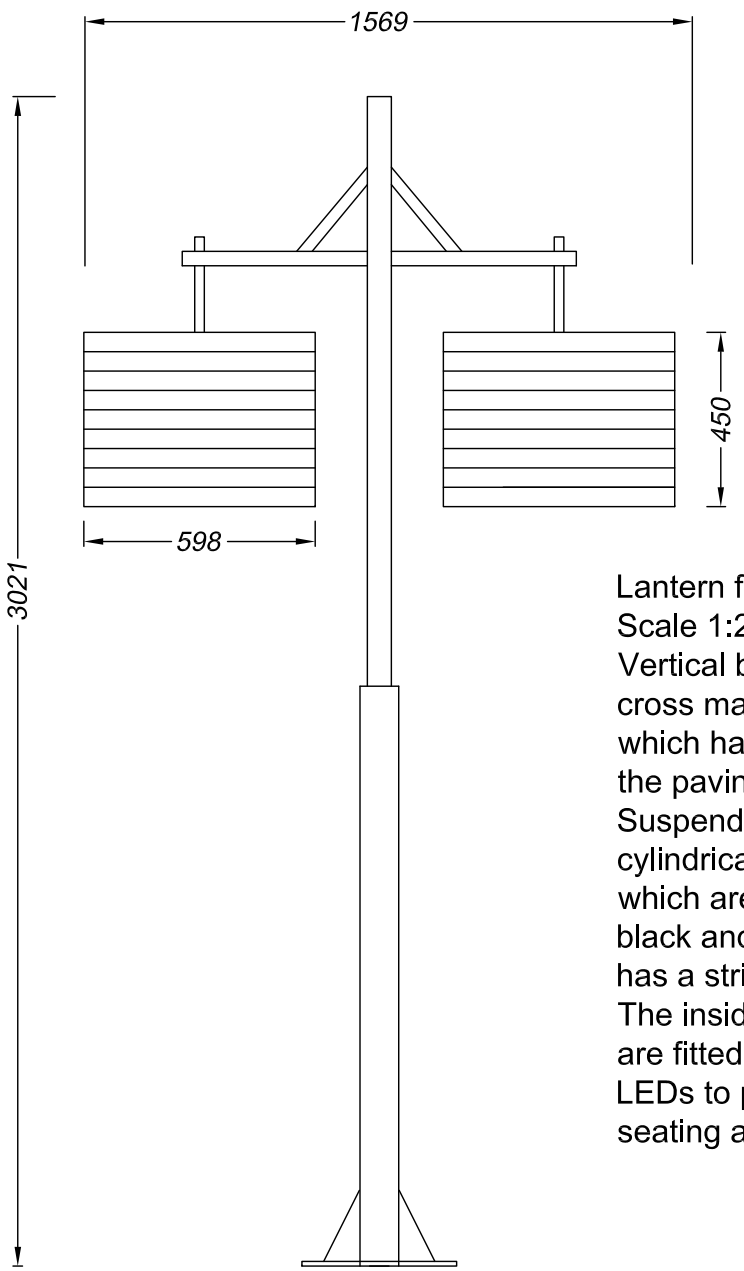

Lantern frame - 2 off
Scale 1:20
Vertical black frame is a welded cross made from CHS mild steel which has a welded plate bolted into the paving.
Suspended from the frame are two cylindrical clear perpex lanterns which are lined with translucent black and white printed vinyl which has a stripe pattern.
The inside of the perspex cylinders are fitted with low energy white LEDs to provide illumination for the seating area.

Windbreak on poles - 2 off
Scale 1:20
Windbreaks with chrome posts and stainless steel cables.
Black canvas windbreaks having printed white stripes and printed white logos.
Non illuminated.

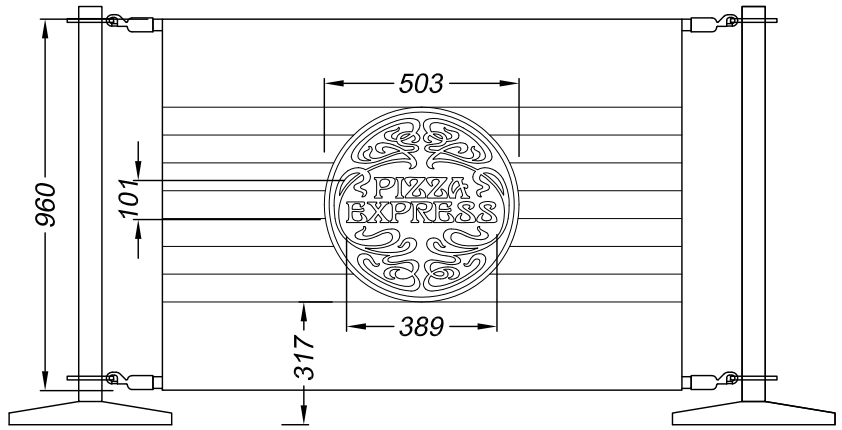

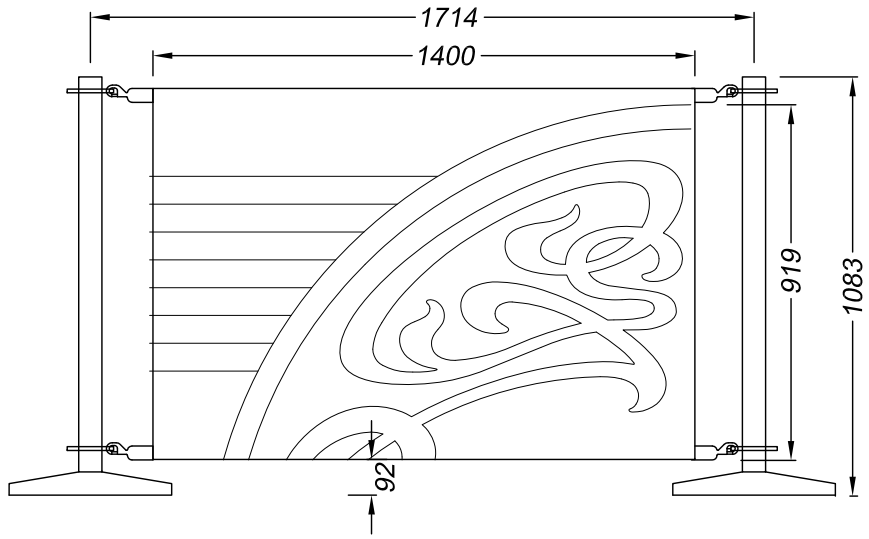

B	Survey measurements included	20/10/14
A	Whole application altered	13/10/14

Technical Signs
Floor 1 - Unit 3
Hille Business Centre
132 St Albans Road
Watford, Herts, WD24 4AE
Tel: 01923 811999
Fax: 01923 811998
E-mail: info@technicalsigns.co.uk

Client: Pizza Express
Address/Job details: 194a Haverstock Hill, Belsize Park, NW3 2AJ
Existing Signs
Job No
Drawn by: DN
Date: 01/09/14
Scale: As specified (A3)
Drawing No: 438702-3
Rev: B