SOUTH EAST ELEVATION

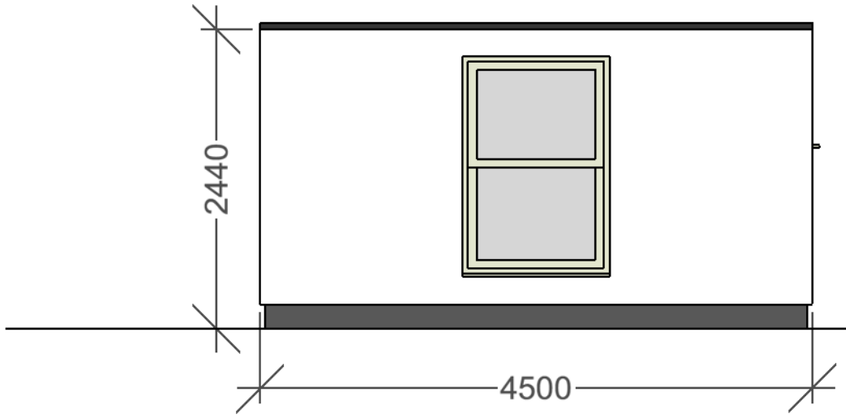

SOUTH WEST ELEVATION

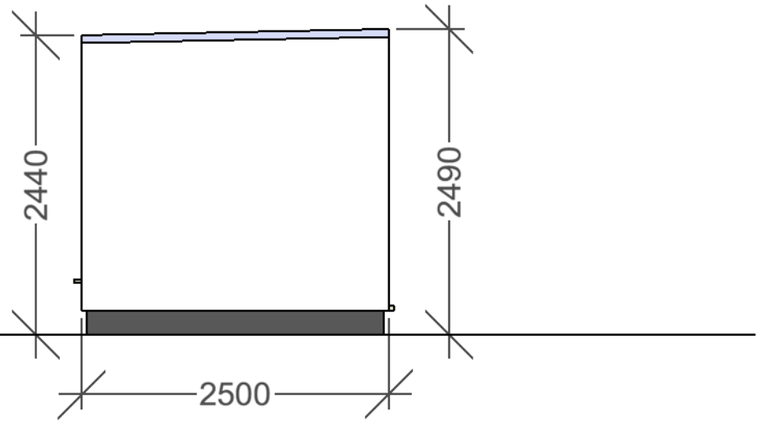

NORTH WEST ELEVATION

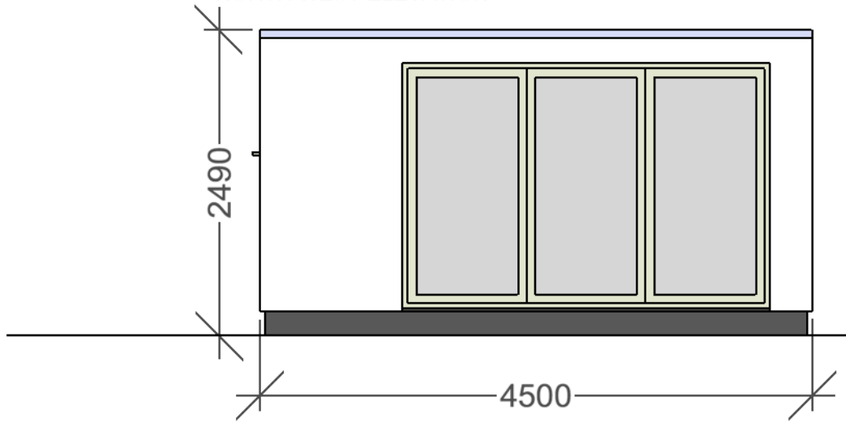

NORTH EAST ELEVATION

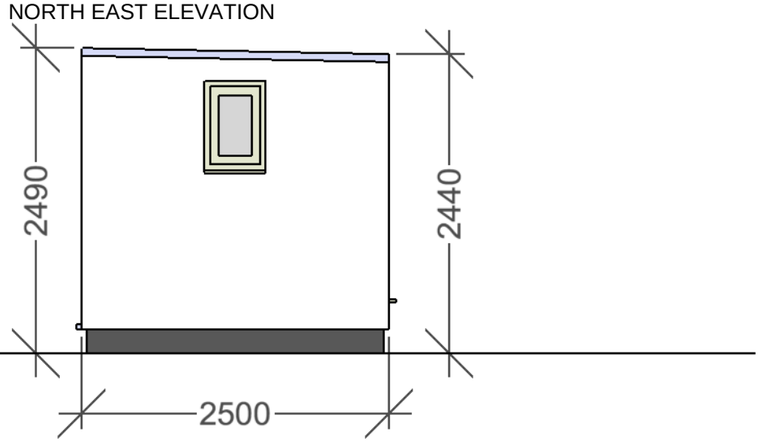

METRIC SCALE BAR

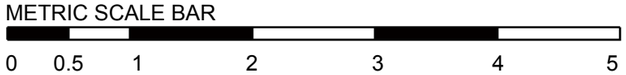

NOTES:
Roofing: Firestone Rubbercover single ply EPDM finished into aluminium roof edge trim with black PVCu square line guttering; covered with living green Sedum plants with 300mm wide perimeter of 20-40mm pebbles
Walls: Limestone White colour K-Rend Silicone Thin Coat organic resin render
Joinery: Windows and doors powder-coated aluminium finished in Farrow & Ball Vert de Terre colour (no. 234)

PROPOSED OUTBUILDING AT:
29A Belsize Park Gardens, London NW3 4JH
For: Frances Tomelty

(c) 2014 A Plus Joinery Ltd t/a Green Studios
www.green-studios.com

DRG NO:
SC/FT/ELEV

SCALE 1:50 @ A3

28 JULY 2014