SOUTH EAST ELEVATION

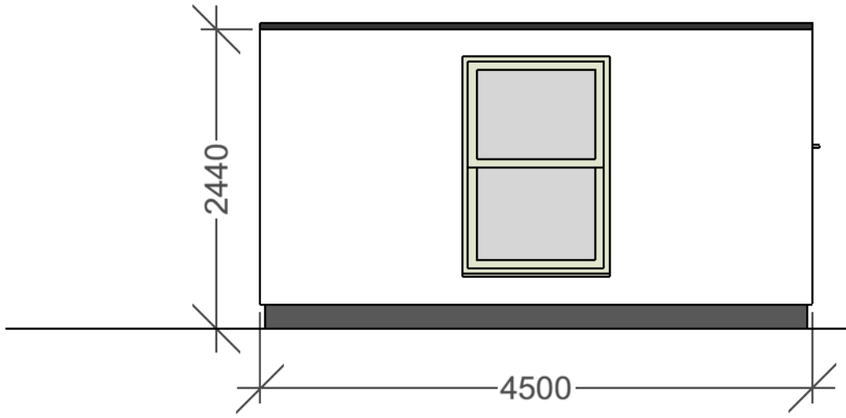

SOUTH WEST ELEVATION

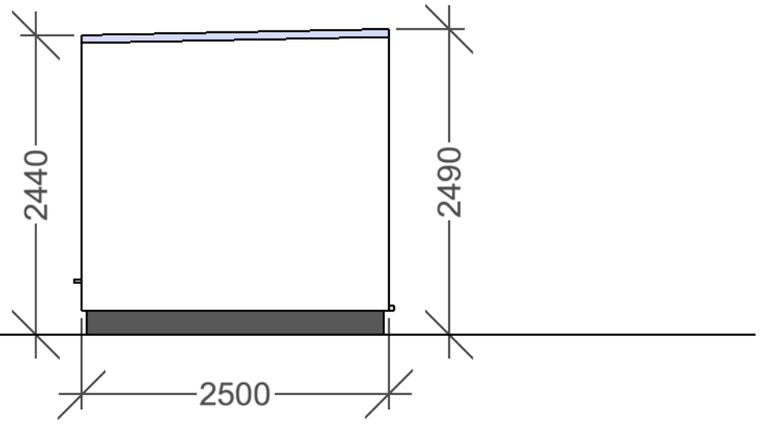

NORTH WEST ELEVATION

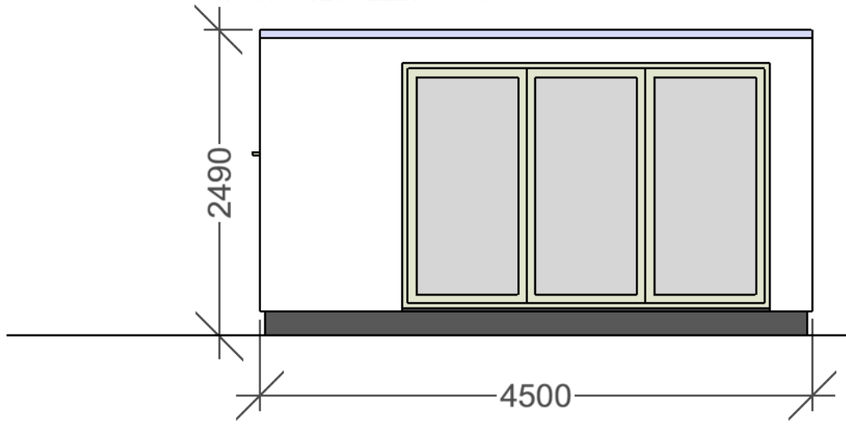

NORTH EAST ELEVATION

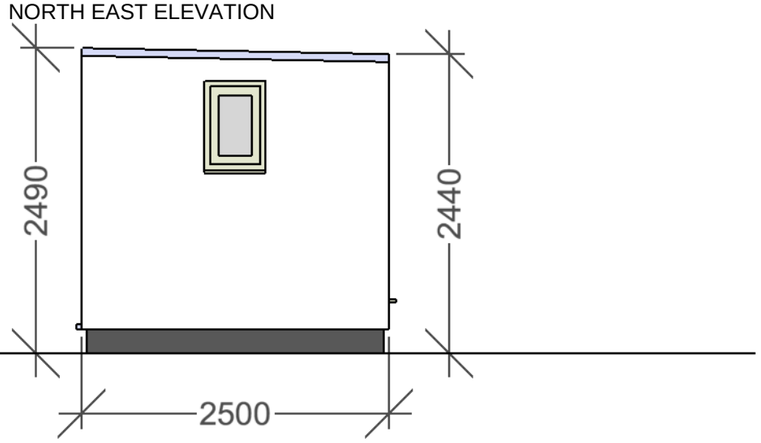

METRIC SCALE BAR

0 0.5 1 2 3 4 5

NOTES:
Roofing: Firestone Rubbercover single ply EPDM finished into aluminium roof edge trim with black PVCu square line guttering; covered with living green Sedum plants with 300mm wide perimeter of 20-40mm pebbles
Walls: Vertical T&G Western Red Cedar cladding
Joinery: Windows and doors powder-coated aluminium finished in RAL 7016 Anthracite Grey colour

PROPOSED OUTBUILDING AT:
29A Belsize Park Gardens, London NW3 4JH
For: Frances Tomelty

(c) 2014 A Plus Joinery Ltd t/a Green Studios
www.green-studios.com

DRG NO:
SC/FT/ELEV (revA)

SCALE 1:50 @ A3

17 SEPT 2014