DO NOT SCALE FROM THIS PRINT OR USE AS A TEMPLATE

All dimensions must be verified on site before any work is put into hand and any discrepancies must be reported to the Architect. Where any variations occur between small scale and detailed drawings, detail drawings should be worked to.

Copyright of this drawing is reserved by Concepts Architectural Design Ltd and is issued on condition that it is not copied or disclosed to any third party either wholly or in part without the consent of Concepts Architectural Design Ltd. in writing.

AWX010 3355

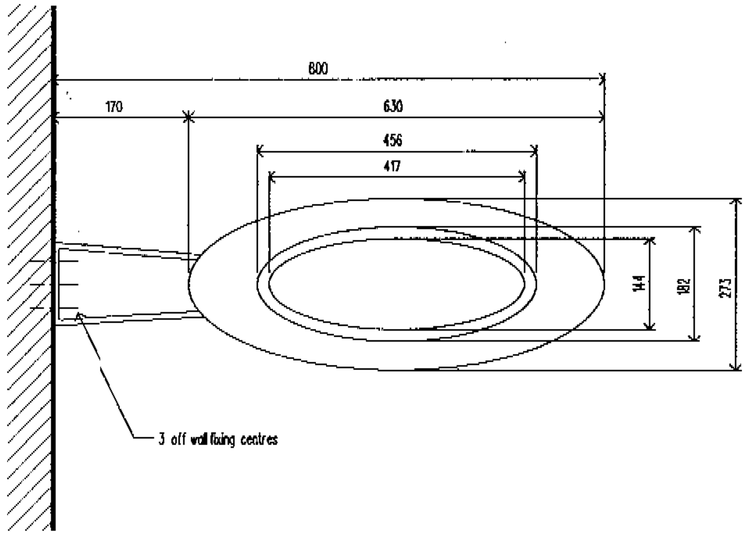

PLAN ELEVATION

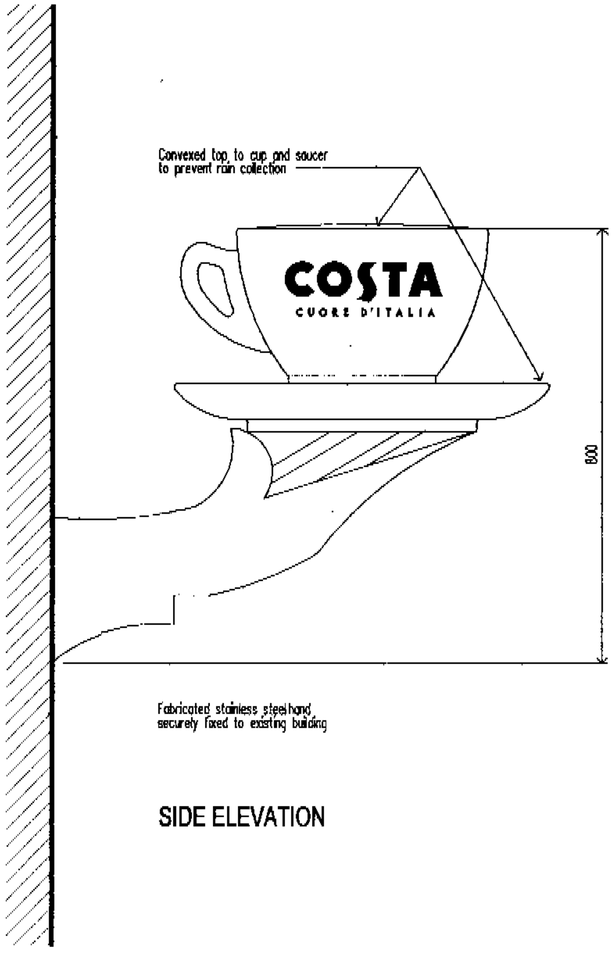

SIDE ELEVATION

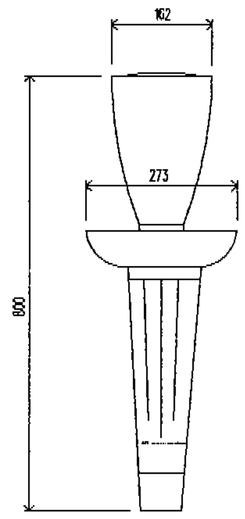

FRONT ELEVATION

Revision A.1

Project

COSTA LIMITED
203 WEST END LANE
WESTHAMPSTEAD
LONDON

Title

PROJECTING CUP AND SAUCER SIGN DETAILS

Drg No. 0011 / 584 / 05

Scale 1 : 10 (A3) Drawn SKC

Date APRIL 2001 Checked

CONCEPTS
Architects
16 Mercia Business Village, Torwood Close, Coventry CV4 8HX
Telephone : 024 7646 8393
Facsimile : 024 7646 7300
Email : concepts-arch@dial.pipex.com

LAYOUTS CREATED FROM PREVIOUS RECORDEDINFORMATION. CONTRACTOR TO ENSURESITE DIMENSIONS ARE TAKEN ON ANY CRITICAL DIMENSIONS

DO NOT SCALE FROM THIS PRINT OR USE AS A TEMPLATE.

All dimensions must be verified on site before any work is put into hand and any discrepancies must be reported to the Architect. Where any variations occur between small scale and detailed drawing, detail drawings should be worked to.

Copyright of this drawing is reserved by Concepts Architectural Design Ltd. and is issued on condition that it is not copied or disclosed to any third party either wholly or in part without the consent of Concepts Architectural Design Ltd. in writing.

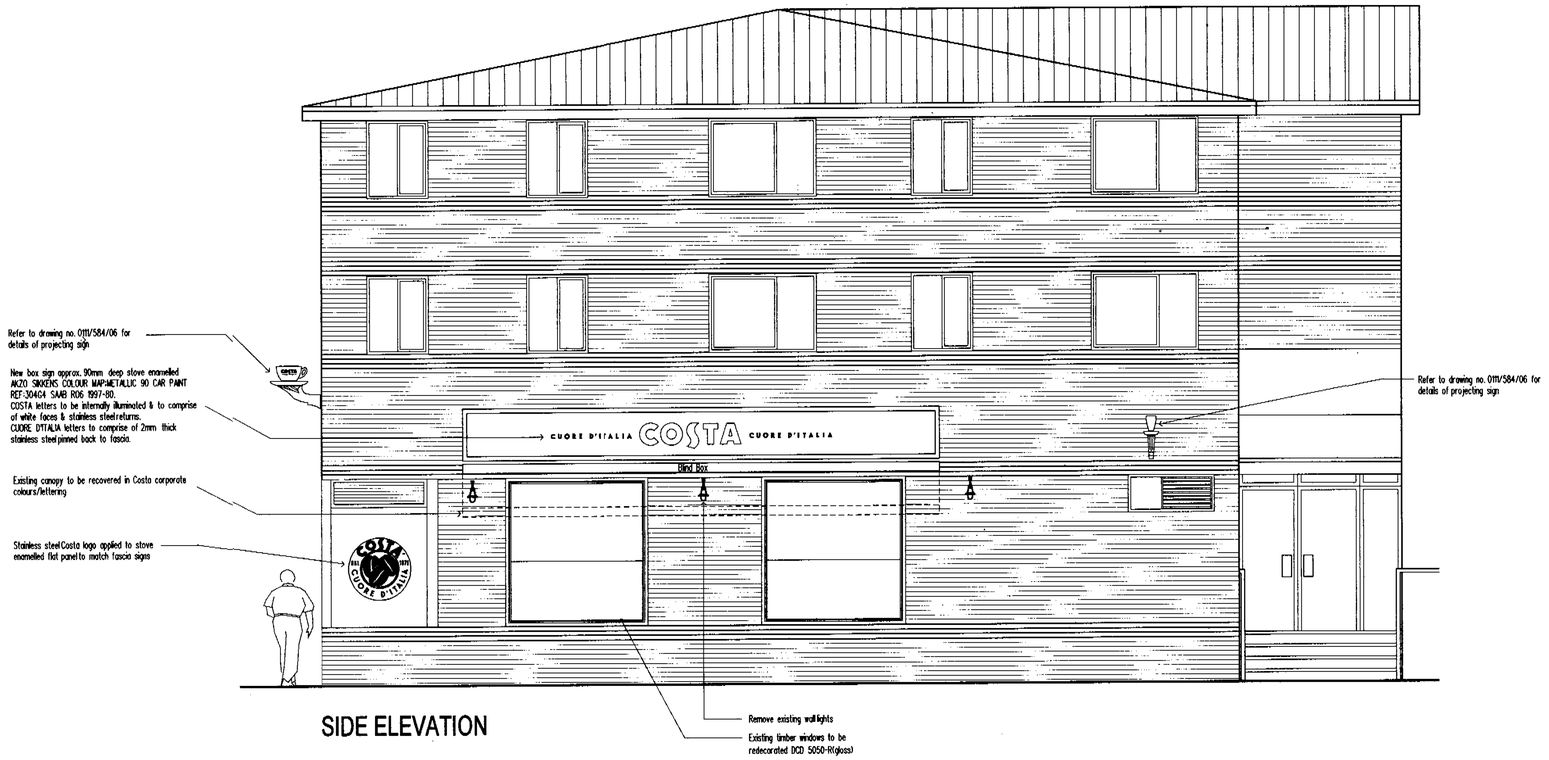

SIDE ELEVATION

AWX0103355

FRONT ELEVATION

Project

COSTA LIMITED
203 WEST END LANE
WEST HAMPSTEAD
NW6 2LJ

Title

PROPOSED ELEVATIONS

PROPOSED

Drg No. 0011 / 584 / 04

Scale 1 : 50 (A1) Drawn PDW

Date APRIL. 2001 Checked

CONCEPTS
Architects
18 Mercia Business Village, Torwood Close, Coventry CV4 8HX
Telephone : 024 7646 8393
Facsimilie : 024 7646 7300
Email : concepts-arch@dial.pipe.com