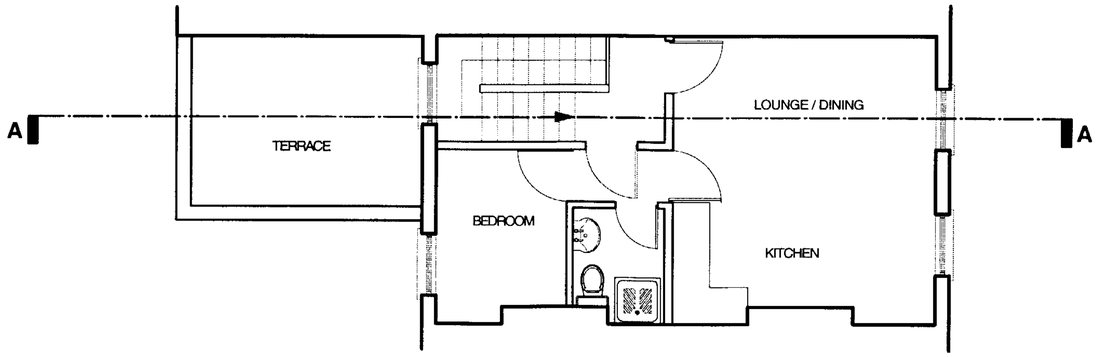


**SECOND FLOOR**

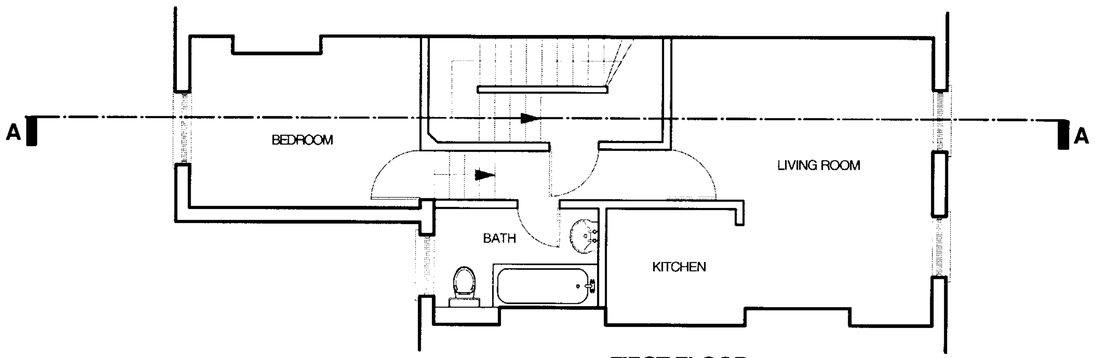


**FIRST FLOOR**

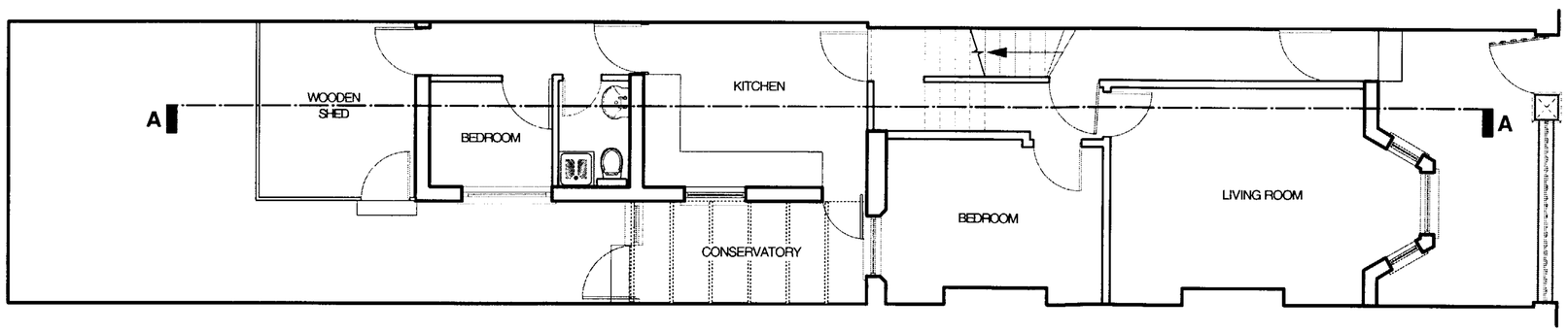


**GROUND FLOOR**

# Notes:

Only figured dimensions are to be used, do not scale from drawings.

Contractors to verify all dimensions on site before commencing any work or shop drawing.

Any discrepancies between these drawings and the actual situation encountered on site should be conveyed to ASK Planning and/or contract administrator immediately.

All building work to comply with the latest relevant code of practice, British Standards and Building Regulations.

No part of this drawing may be reproduced without the permission of ASK Planning.

© ASK Planning 1998

## Revisions:

| | | | |
|---|---|---|---|
| | | | |
| | | | |
| | | | |
| | | | |
| | | | |

## Key:

**ASK Planning**

1 Heatreahcroft, Ealing, London W5 3BY
Tel: 020 8991 1199 Fax: 020 8991 1188

LOCATION
**8 LOVERIDGE ROAD, LONDON NW6**

TITLE/VIEW
**Existing Ground, First and Second Floor Plans**

| | |
|---|---|
| SCALE 1 : 100 | DRAWN BY angel. |
| DRAWING NO. 2002/210/P/02 | DATE Mar/2002 |
| | REV. |

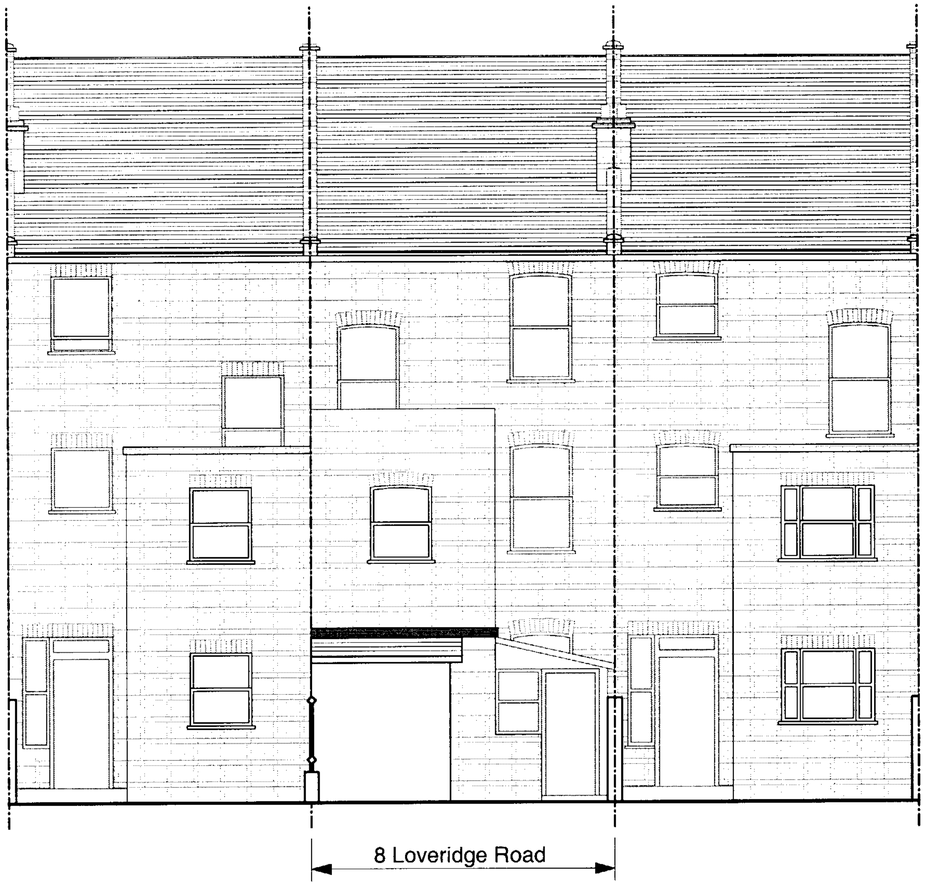


**REAR ELEVATION**

**FRONT ELEVATION**

# Notes:

Only figured dimensions are to be used, do not scale from drawings.

Contractors to verify all dimensions on site before commencing any work or shop drawing.

Any discrepancies between these drawings and the actual situation encountered on site should be conveyed to ASK Planning and/or contract administrator immediately.

All building work to comply with the latest relevant code of practice, British Standards and Building Regulations.

No part of this drawing may be reproduced without the permission of ASK Planning.

© ASK Planning 1998

## Revisions:

| | | | |
|---|---|---|---|
| | | | |
| | | | |
| | | | |
| | | | |
| | | | |

## Key:

**ASK Planning**

1 Heatreahcroft, Ealing, London W5 3BY
Tel: 020 8991 1199 Fax: 020 8991 1188

LOCATION
**8 LOVERIDGE ROAD, LONDON NW6**

TITLE/VIEW
**Existing Front & Rear Elevation**

| | |
|---|---|
| SCALE 1 : 100 | DRAWN BY angel. |
| DRAWING NO. 2002/210/P/03 | DATE Mar/2002 |
| | REV. |

**EXISTING SECTION AA**

# Notes:

Only figured dimensions are to be used; do not scale from drawings.

Contractors to verify all dimensions on site before commencing any work or shop drawing.

Any discrepancies between these drawings and the actual situation encountered on site should be conveyed to ASK Planning and/or contract administrator immediately.

All building work to comply with the latest relevant code of practice, British Standards and Building Regulations.

No part of this drawing may be reproduced without the permission of ASK Planning.

© ASK Planning 1998

## Revisions:

| | | | |
|---|---|---|---|
| | | | |
| | | | |
| | | | |
| | | | |
| | | | |

## Key:

**ASK Planning**

1 Heatreahcroft, Ealing, London W5 3BY
Tel: 020 8991 1199 Fax: 020 8991 1188

LOCATION

**8 LOVERIDGE ROAD, LONDON NW6**

TITLE/VIEW

**Existing Section**

| | |
|---|---|
| SCALE 1 : 100 | DRAWN BY angel. |
| DRAWING NO. 2002/210/P/04 | DATE Mar/2002 |
| | REV. |

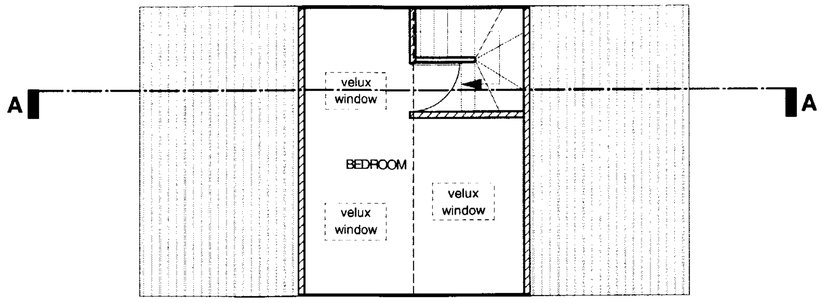


LOFT

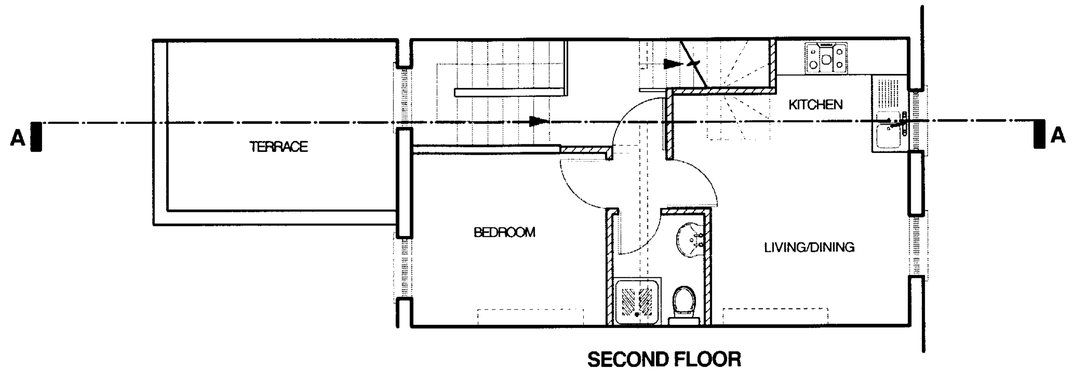


SECOND FLOOR

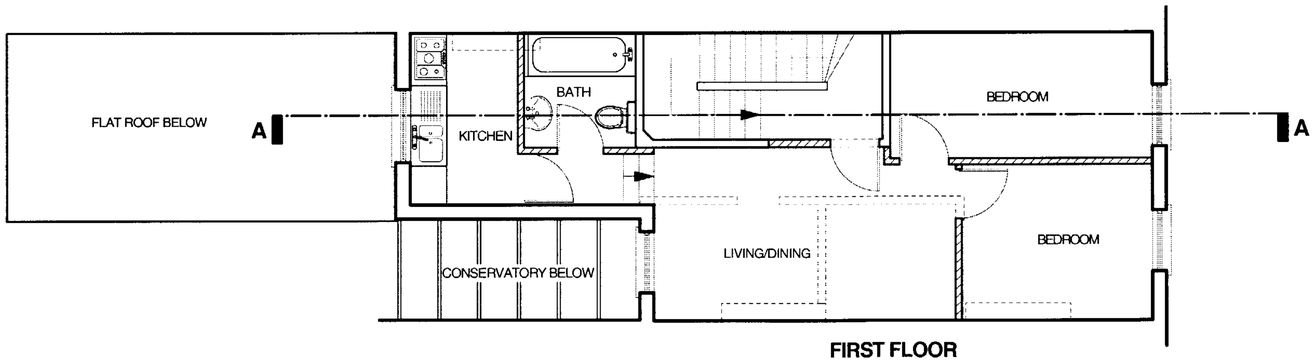


FIRST FLOOR

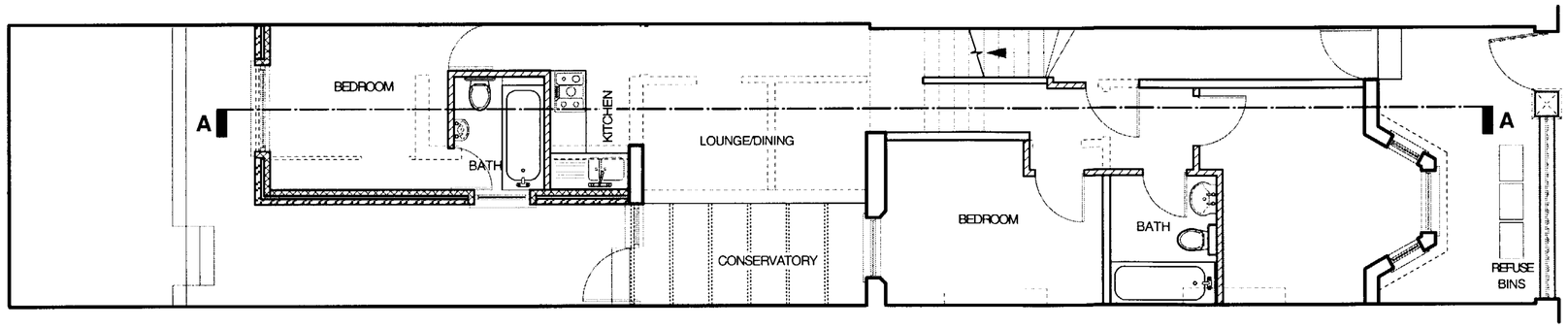


GROUND FLOOR

## Notes:

Only figured dimensions are to be used; do not scale from drawings.

Contractors to verify all dimensions on site before commencing any work or shop drawing.

Any discrepancies between these drawings and the actual situation encountered on site should be conveyed to ASK Planning and/or contract administrator immediately.

All building work to comply with the latest relevant code of practice, British Standards and Building Regulations.

No part of this drawing may be reproduced without the permission of ASK Planning.

© ASK Planning 1998

## Revisions:

| | | |
|---|---|---|
| | | |
| | | |
| | | |
| | | |
| | | |

## Key:

new cavity wall

new wall

removed wall

**ASK Planning**
1 Heatreahcroft, Ealing, London W5 3BY
Tel: 020 8991 1199 Fax: 020 8991 1188

LOCATION
**8 LOVERIDGE ROAD, LONDON NW6**

TITLE/VIEW
**Proposed Ground, First and Second Floor Plans**

| | | | |
|---|---|---|---|
| SCALE | 1 : 100 | DRAWN BY | angel. |
| DRAWING NO. | 2002/210/P/05 | DATE | Mar/2002 |
| | | REV. | |

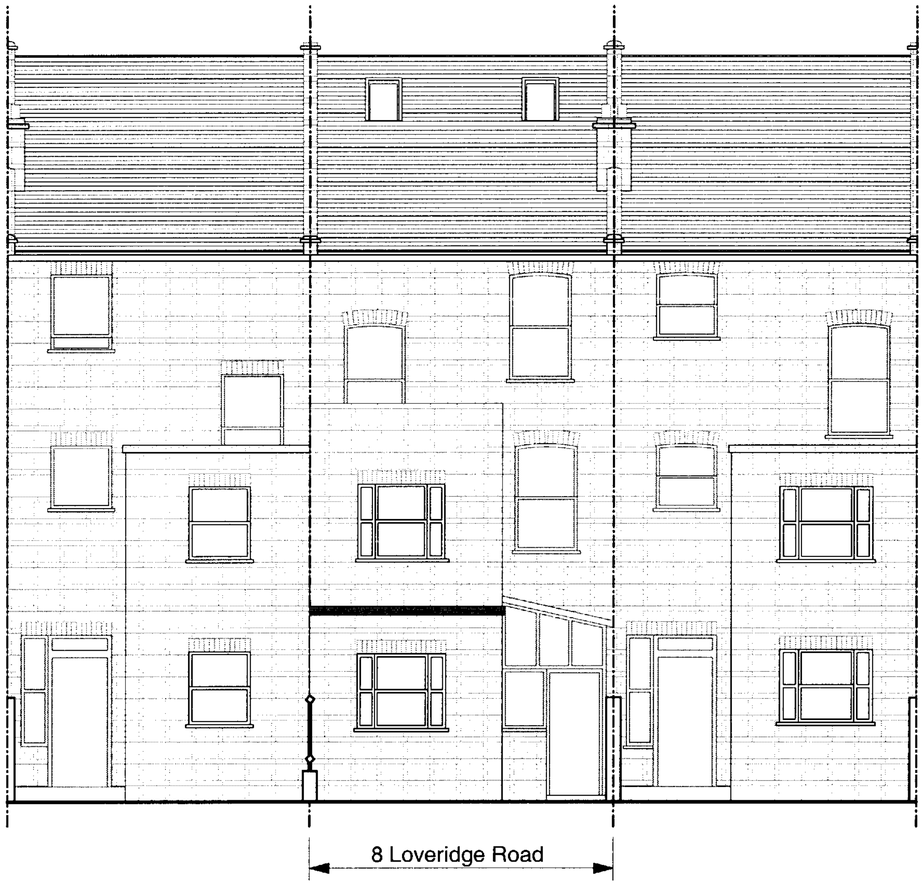


**REAR ELEVATION**

**FRONT ELEVATION**

# Notes:

Only figured dimensions are to be used, do not scale from drawings.

Contractors to verify all dimensions on site before commencing any work or shop drawing.

Any discrepancies between these drawings and the actual situation encountered on site should be conveyed to ASK Planning and/or contract administrator immediately.

All building work to comply with the latest relevant code of practice, British Standards and Building Regulations.

No part of this drawing may be reproduced without the permission of ASK Planning.

© ASK Planning 1998

## Revisions:

| | | | |
|---|---|---|---|
| | | | |
| | | | |
| | | | |
| | | | |
| | | | |

## Key:

**ASK Planning**

1 Heatrealhcroft, Ealing, London W5 3BY
Tel: 020 8991 1199 Fax: 020 8991 1188

LOCATION
**8 LOVERIDGE ROAD, LONDON NW6**

TITLE/VIEW
**Proposed Front & Rear Elevation**

| | |
|---|---|
| SCALE 1 : 100 | DRAWN BY angel. |
| DRAWING NO. 2002/210/P/06 | DATE Mar/2002 |
| | REV. |

**PROPOSED SECTION AA**

# Notes:

Only figured dimensions are to be used, do not scale from drawings.

Contractors to verify all dimensions on site before commencing any work or shop drawing.

Any discrepancies between these drawings and the actual situation encountered on site should be conveyed to ASK Planning and/or contract administrator immediately.

All building work to comply with the latest relevant code of practice, British Standards and Building Regulations.

No part of this drawing may be reproduced without the permission of ASK Planning.

© ASK Planning 1998

## Revisions:

| | | | |
|---|---|---|---|
| | | | |
| | | | |
| | | | |
| | | | |
| | | | |

## Key:

**ASK Planning**

1 Heatreahcroft, Ealing, London W5 3BY
Tel: 020 8991 1199 Fax: 020 8991 1188

LOCATION

**8 LOVERIDGE ROAD, LONDON NW6**

TITLE/VIEW

**Proposed Section**

| | |
|---|---|
| SCALE 1 : 100 | DRAWN BY angel. |
| DRAWING NO. 2002/210/P/07 | DATE Mar/2002 |
| | REV. |

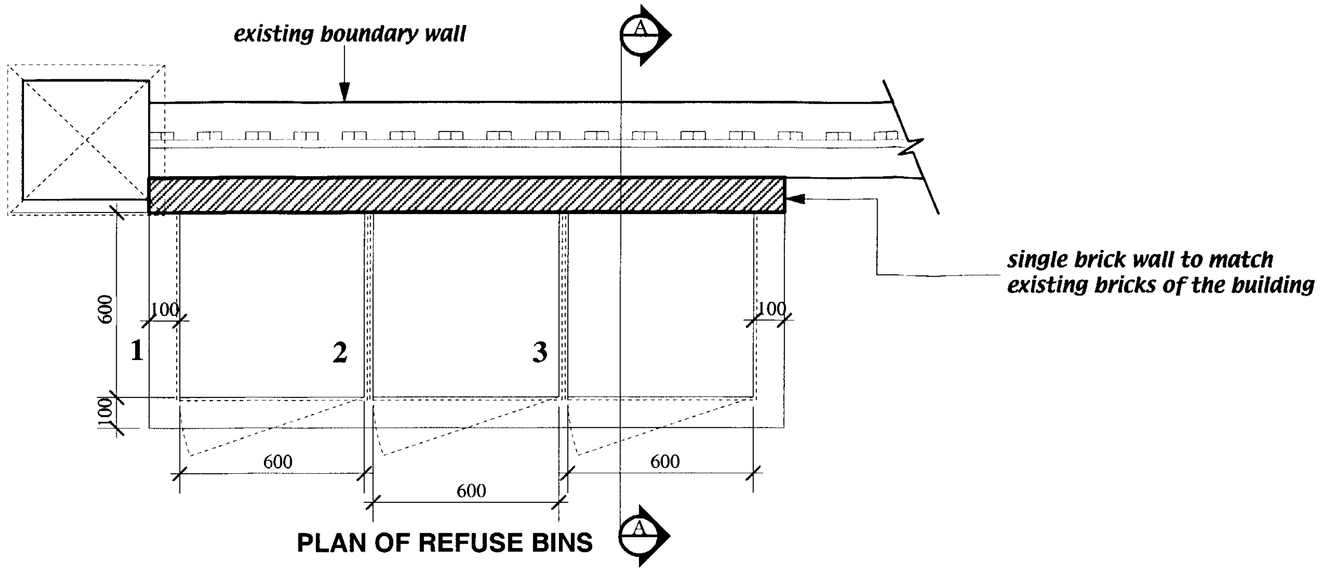


PLAN OF REFUSE BINS

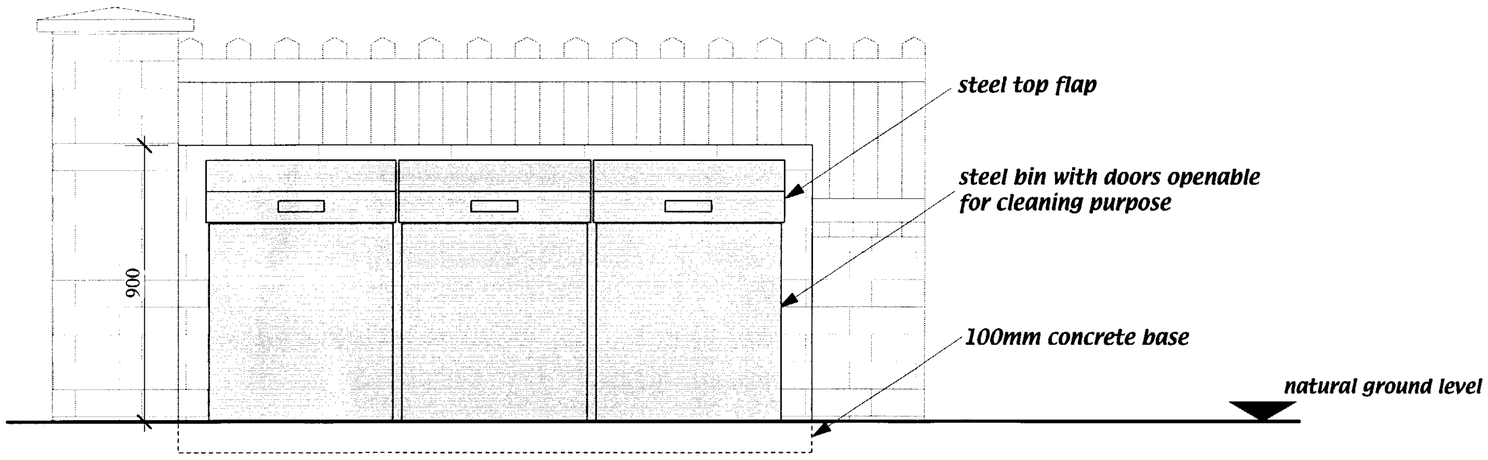


FRONT ELEVATION

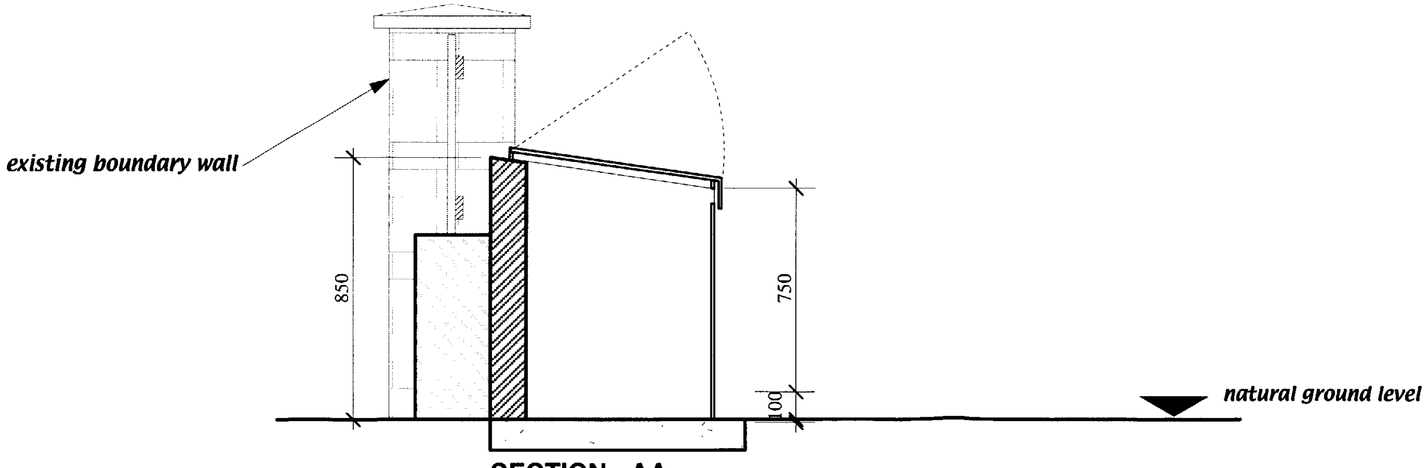


SECTION - AA

## Notes:

Only figured dimensions are to be used; do not scale from drawings.

Contractors to verify all dimensions on site before commencing any work or shop drawing.

Any discrepancies between these drawings and the actual situation encountered on site should be conveyed to ASK Planning and/or contract administrator immediately.

All building work to comply with the latest relevant code of practice, British Standards and Building Regulations.

No part of this drawing may be reproduced without the permission of ASK Planning.

© ASK Planning 1998

Revisions:

| | | |
|---|---|---|
| | | |
| | | |
| | | |
| | | |
| | | |

Key:

**ASK Planning**

1 Heathcroft, Ealing, London, W5 3BY
Tel: 020 8991 1199 Fax: 020 8991 1188

LOCATION
**8 LOVERIDGE ROAD, LONDON NW6**

TITLE/VIEW
**Details of refuse bins**

| | | | |
|---|---|---|---|
| SCALE | 1 : 100 | DRAWN BY | angel. |
| DRAWING NO. | 2002/210/P/08 | DATE | Mar/2002 |
| | | REV. | |