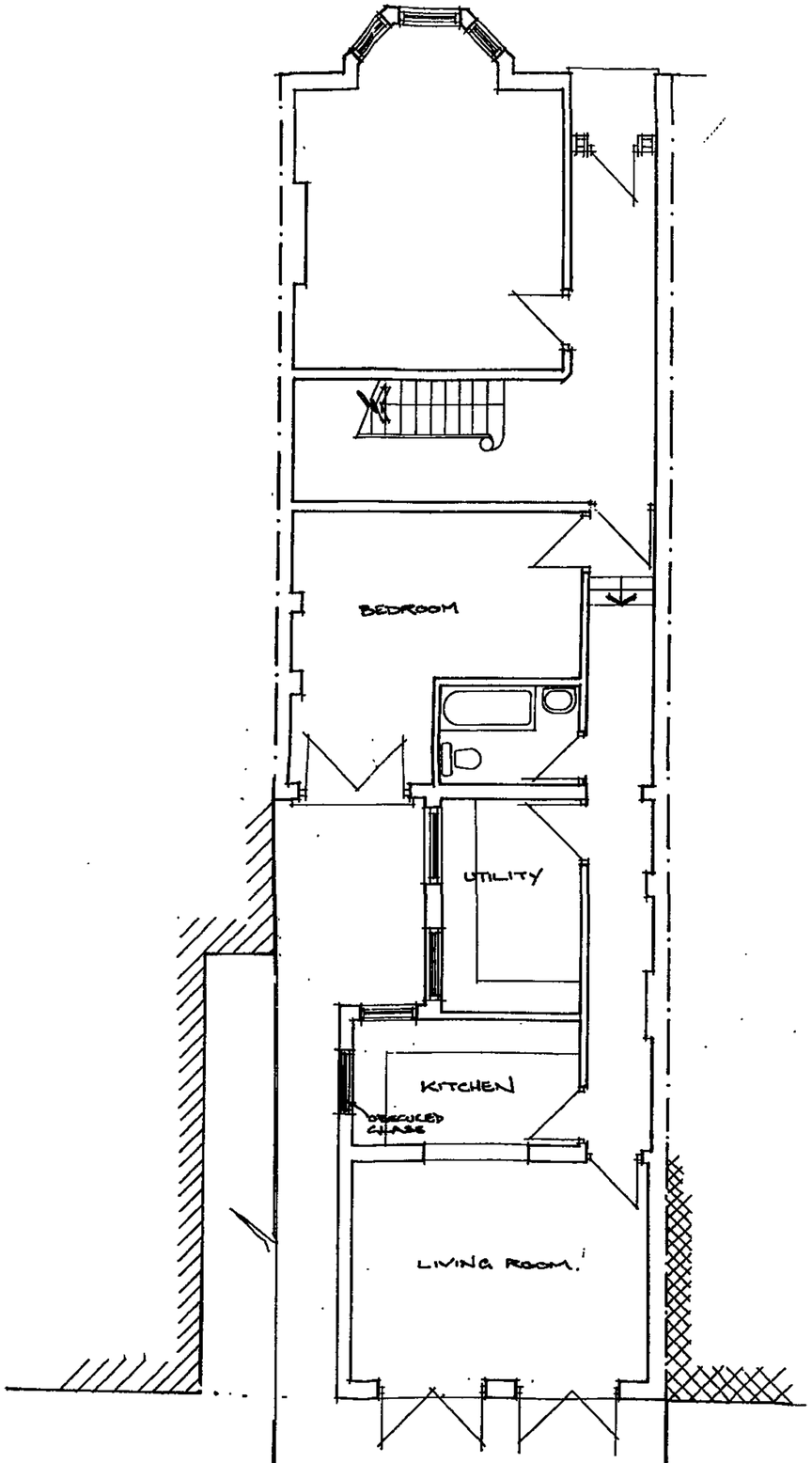

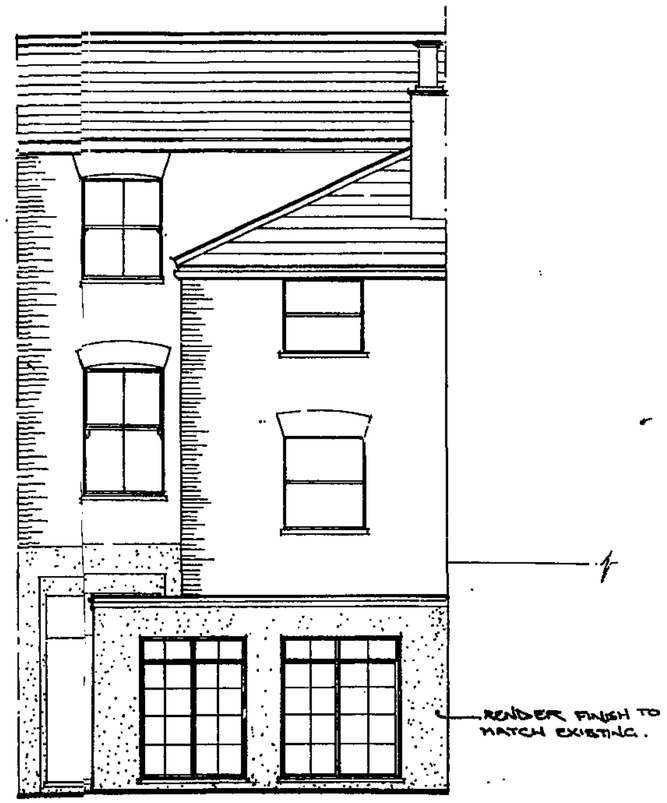

PROPOSED REAR FACADE

26 FORTUNE GREEN RD
LONDON NW6.

Drawing
CA-22/102 A

Scale	Date	Drawn by / Checked by
1:50	JAN 91	

PROPOSED EXTENSION.

AKB
ARCHITECTURAL DESIGN &
PLANNING CONSULTANTS LTD.
6 BEECHWOOD HALL
REGENTS PARK RD N.3
TEL 0351- 349 4073

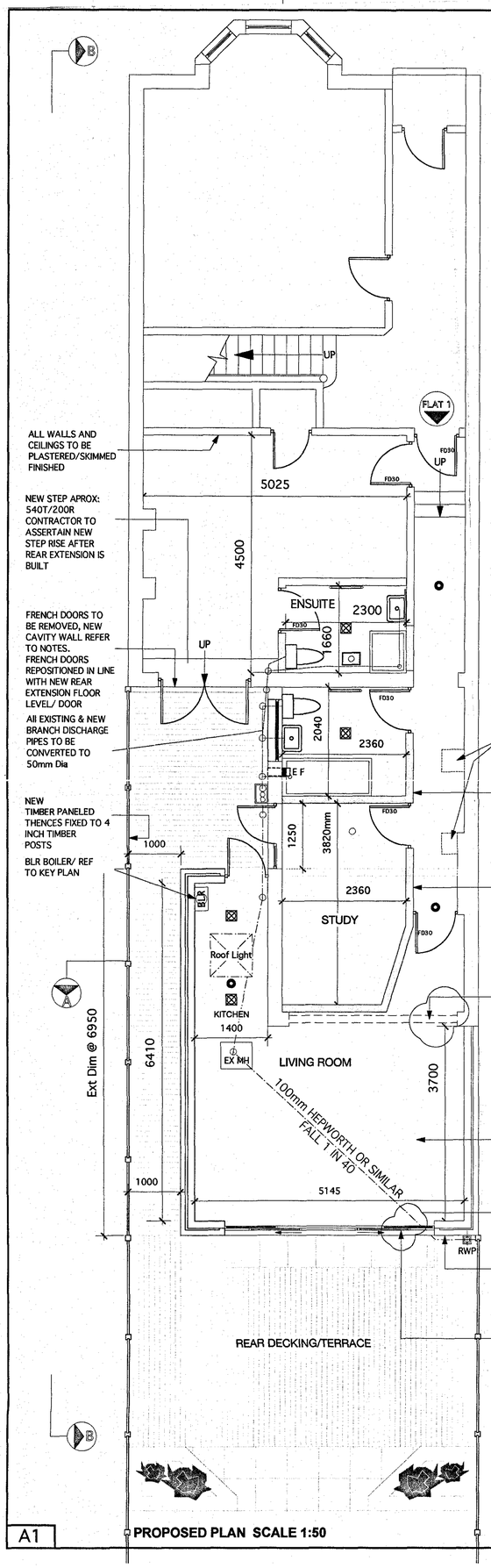

ALL WALLS AND CEILINGS TO BE PLASTERED/SKIMMED FINISHED

NEW STEP APROX: 540T/200R CONTRACTOR TO ASSERTAIN NEW STEP RISE AFTER REAR EXTENSION IS BUILT

FRENCH DOORS TO BE REMOVED, NEW CAVITY WALL REFER TO NOTES. FRENCH DOORS REPOSITIONED IN LINE WITH NEW REAR EXTENSION FLOOR LEVEL/ DOOR

All EXISTING & NEW BRANCH DISCHARGE PIPES TO BE CONVERTED TO 50mm Dia

NEW TIMBER PANELED THENCES FIXED TO 4 INCH TIMBER POSTS

BLR BOILER/ REF TO KEY PLAN

EXISTING CHIMNEY BREAST TO BE REMOVED AS CLOSE AS POSSIBLE TO EXISTING CEILING LEVEL. REMAINING CHIMNEY TO BE SUPPORTED WITH PRESTRESSED CONCRETE LINTELS ON 3 x MILD STEEL GALLO BRACKETS

GALLO BRACKETS TO BE SECURED WITH CHEMICAL FIXING BOLTS.

INTERNAL WALLS (BATH RM) TO BE IN CONCRETE/BREEZE BLOCKWORK 100 OR 150mm thk. W/12mm PLASTER RENDER AND 3mm PLASTER SKIMMED FINISHED TO EITHER SIDE.

S.W STUDWORK 100x50mm OR 100x100mm FILLED W/60mmINSULATION QUILT 2 LAYERS W/12.5 PLATERBOARD EITHERSIDE & 3mm SPLATER TO FINISH. (REFER TO PLAN FOR LAYOUT)

LOADBEARING STEEL TO HAVE INTUMESCENT PAINT/ OR x2 12.5mm PLASTERBOAD, SKIMMED FINISHED

SOLID FLOORS: Solid ground floor slab to consist of 100mm well consolidated hardcore, 50mm blinding, 1200G polythene dpm to be continuous with new and existing damp proof course, 100mm concrete slab reinforced with galvinised wire mesh, 75mm jablite floor insulation laid (incl. edges to prevent cold bridge) and finished with 100mm concrete sand cement screed. Existing air ducts to be maintained through new floor by pipes having a dia. of at least 100mm.

REFER TO SECTION AA

NEW EXTENSION TO BE IN LINE WITH NEIGHBOURING PROPERTY

4000W X 2100H UPVC PATIO
2 X 1000 FIXED PANELS/ TRICKLE VENTED
2 X 1000 SLIDING DOORS CENTRALLY POSITIONED. PATIO TO BE IN K RATED GLASS TOUGHENED OUTERSKIN AND LAMINATED INNERSKIN

REAR DECKING/TERRACE

PROPOSED PLAN SCALE 1:50

A1

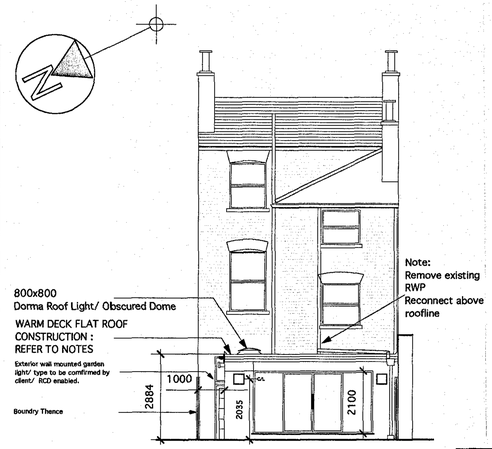

REAR ELEVATION AA SCALE 1:100

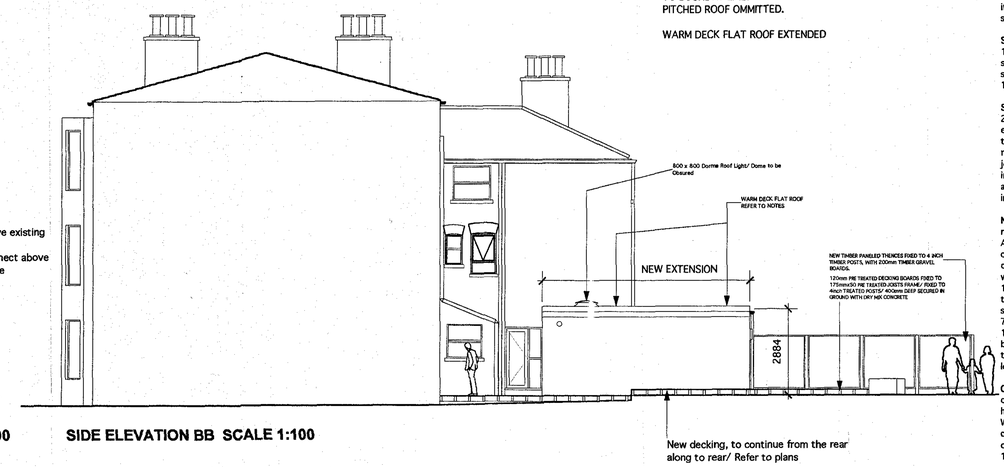

SIDE ELEVATION BB SCALE 1:100

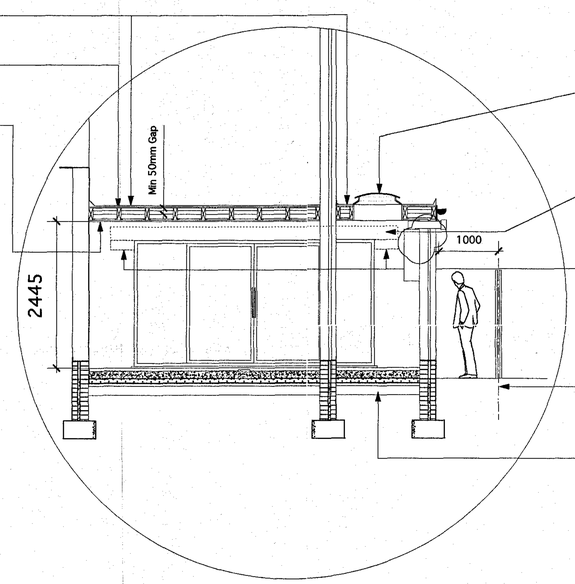

Ceilings To be confirmed onsite as 12.5mm plasterboard and skim finish. Install 75mm Silver foiled Ridged Board (Kings Span or similar) insulating between all ceiling joists.

SOLID FLOORS: Solid ground floor slab to consist of 100mm well consolidated hardcore, 50mm blinding, 1200G polythene dpm to be continuous with new and existing damp proof course.
100mm concrete slab reinforced with galvinised wire mesh, 75mm jablite floor insulation laid (incl. edges to prevent cold bridge) and finished with 100mm concrete sand cement screed. Existing air ducts to be maintained through new floor by pipes having a dia. of at least 100mm.

SECTION AA SCALE 1:50

SUMMARY OF WORK

SINGLE STOREY REAR & SIDE EXTENSION

DRAINAGE: Drainage all underground drains to be underground quality PVC pipes (e.g. Hunter Marley etc) bedded and surrounded in 150mm pea shingle to manufacturers recommendations. Large radius bends of S& VPO drains passing through walls/ foundations to be bridged with pre-cast RC lintels. Manholes to have a minimum internal size of 600mm x 450mm with 150mm thick concrete base (concrete mix 1:2:4) walls to be 225mm thick class B semi-engineered bricks (mortar mix 1:3) with fair faced internally and flush pointed. Verified clay main straight channel and branches bended in sand/ cement 1:3 trowelled smooth (external manholes to have galvanised mild steel covers and frames). Internal manhole covers to accessable and not to be coveredd by any appliances.Internal manholes to have double saet bolt down with cover corrosion resistance bolts to each corner.

ABOVE GROUND DRAINAGE: Plumbing 100mm dia. PVBC S& VP with 100mm dia. Branch to WC pan. 38mm dia. Waste to bath/ shower, washbasin and kitchen sink 32mm dia. Wastes greater than 2500mm in lengthto be increased to 50mm dia. Appliances to have 75mm deep seal traps. Waste from appliances to run into S& VP to terminate 900mm above roof- line with balloon guard. Alternatively wastes from ground floor appliances (except WC) to dischage to back lintel gully or to existing below grating level but above water level. S& VP extenended minimum of 500mm above any openable window. Rainwater to discharge to existing soakaway system providing it proves suitable. No waste pipe to connect to S& VP within areas of 300mm of ctr. line of WC branch connections. All internal S& VP insulated in 60mm quilt insulation and plasterboard encased.

RAINWATER: Disposal to be by 100mm half round gutter (minimum fall 1 in 40) with 75mm dia. pipes connected to 100mm dia. hep sleeves or similar drain run, bedded and surrounded in 100mm of concrete discharging into soak-away sited at least 5000mm from any building. Soak-away to be sized/ depth to suit ground conditions. Soak-awy to 100mm concrete base with honeycomb brick walls (no gap greater than 25mm) with 150mm reinforced cocrete lid. Downpipes to be max of 200mm from return edge of gutter return.

ROOF TILING: Tiling to match existing on 38mm x 19mm treated s.w battens on reinforced sarking felt onto rafters sized as indicated on plans. Ceiling Joists fixed as indicated on plan secured on rafters and wall plates with 240mm mineral fibre insulation material laid between them/ and 2x 200mm between. Junction between new and existing roofs to have aluminium performed valley over exterior plywood lay board. Allow for 25mm space behind fascia on at least low opposite elevations. Roof timbers to be trimmed with double joists around roof- light and weathered with lead flashings.

TILED ROOF: Min roof pitch 25 degrees. Tiles on battens and felt over patent trussed rafters 600mm ctrs. Design in accordance with B.S C.P 112 truss manufacturers details and calculations to be submitted for L.A approval before before work commences. 125Smm Duplex plasterboard ceiling set with plaster 240mm fibre insulating material laid over. All exposed timber and built into walls, to be treated with wood preservatives in accordance with C.P 98. Timber in roof void to be pressure impregnated with preservative, all structural timber to be stamped DRY or KD (kilin dried). Roof vents/ and or breathable membrane to be installed as as per manufacturers recommendations.
FLAT ROOF: To give U-value of 0.25 W/MK (e.g.200mm fibreglass laid over/ or 75mm dense batts laid between joists).

COLD DECK: Construction to be covered with 12mm thick mineral chippings bedded in hot bitumen in hot bitumen over 3 layers of roofing felt complying with B.S 747 all set in hot bitumen on 18mm marine ply or boarding over firings (to providefall 1 in 60). 50 x 50mm cross battens at 400mm ctrs. To provide cross ventilation to roof space over joist sizes and gtrs. (as per plan) 150mm mineral fibre insualtion laid between joists 100g polythene fixed to underside of joits as vapour barrier. 12.5mm plasterboard ceiling set with plaster skim, alternatively use 12.5mm Gyproc Duplex plasterboard. Wher abutting existing wall felt taken up over tiling fillet minimum 150mm above level and weathered chase in wall.

PARAPET WALL: Coping stone (s/ steeel mechanically fixed into masonry) over dpc projecting 50mmm min. incorporating drip from face of wall cavity tray w/ weepholes (@900mm ctrs. or every four bricks max). Continuous cavity tray sloped toward outerleaf w/ joints lapped & sealed. Cover flashing to overlap stepped flashing on tiled roof DPC made continuous by lapping over mechanical fixing. Cavity trays 150min. w/ watertight stopends and weepholes @900mm ctrs. max.

SERVICES: All should be compliance with relevant guidelines (e.g. IEE Regulations/ NICEIC/ CORGI/ HVCA & relevant BS Codes) tested- approved and certified by registered contractors upon completion. (located as per plan).

GENERAL NOTES TO CONTRACTORS
(1)ALLDIMENSION TO BE CHECKED ON SITE BEFORE COMMENCING WORK
CONTRACTOR TO CHECK LEVEL,HEIGHTS, DRAIN RUNS,LOAD BEARING WALLS,AND CONDITION OF ETC.
ELETRICAL WORK TO BE ACCORDING TO NIC EIC.REGULATION.

KEY:
All installations to comply with relevant British Standards & energy efficiency guidelines & be installed by approved contractors NICEIC or ECA & or approved Corgi contractor. Contractor to issue Test Completion Certificate and appliance manuals.

- Smoke Alarm hardwired& interconnected
- Wall mounted 4" extractor fan
- Batten Light (Energy Efficent Lamps only)
- BLR — Combination Boiler BTU as approp. (SEDBUCK rating 82%, SAP-98) w/ thermostatic radiator valves, timer device to control periods when heating system operates & provided w/ flow switch or control inter-lock room thermostat). All hot water pipes insualted. User Manual to be provided.
- FD30 — Self closing FD30 fire door 826mmx 44mmx 2040mm or to suit existing frame size (Howdens- Four Panel Grained)

FOUNDATIONS: Existing foundations exposed for suitability and underpinned if found necessary. Foundations to be of size & depth to suit site conditions. Minimum 600mm wide and taken down a minimum depth of 1000mm (or to L.A approval). Foundations to be taken down to invert level of any adjacent drains and within 1000mm of such drain runs. Foundation concrete should be composed of cement to BS 12 1978 and fine/ coarse aggregate confroming to BS 882 1983 in proportionof 50kg of cement to not more than 01m of fine aggregate and 0.2m of course aggregate. Wheredrains run under building encase in 150mm concrete
if required by L.A and bridge over wher passing through wal with R.C lintel to L.A satisfaction. Foundations sufficient so as not to exert additional ground pressure on existing drains.

SOLID FLOORS: Solid ground floor slab to consist of 100mm well consolidated hardcore, 50mm blinding, 1200G polythene dpm to be continuous with new and existing damp proof course, 100mm concrete
slab, 75mm jablite floor insulation laid (incl. edges to prevent cold bridge) and finished with 100mm concrete sand cement screed. Existing air ducts to be maintained through new floor by pipes having a dia. of at least 100mm.

SOLID WALLS: Walls (solid) below dpc level to be 225mm semi-engineering bricks. Above DPC level to be 265mm Thermolite blocks with 1:1:6 mortar mix with brick- or similar mild steel mesh reinforced to every to every
third course of block work. Walls to be treated with 20mm thick render externally laid in two coats (render not bridge dpc) and 12mm lightweight plaster internally plaster to give U- value of 0.45 W/MK. Movement joint to be
incorporated in solid walls greater than 6000mm in length. Flat strip ties 200mm x 30mm to be provided in alternte mortar courses with stop beads to external finish and proprietry type movement cover strip to internal finish.

NEW WALLS: Secured to existing brickwork with stainless steel "Furfix" wall profiles fixed to manufacturers recommendation. Joist to bear on joist hangers at house wall and built into new external walls.
All structural timbers to be treated wit approved timber preservatives and to be grade 4 SC. Damp proof courses to be lead core or other similar approved material lapped, a minimum 150mm at all joints and to be continuous
with existing dpc to be minimum 150mm above external ground level (may require soak- away if below 150mm). Existing lintels (where taking additional loads) to be exposed and replaced if found unsatisfactory/ to the
satisfaction of the Builiding Control Officer. Lintels (unless otherwise stated) to be Catnic steel lintels with 75mm mineral fibre insulation to inner void U- value of at least 1.2W/M. Catnic lintel to have minimum of 150mm on
bearings. All walls and ceiling linnings to be plastered to give class of surface spread of flame. Lead flashing to be provided at all roof and wall abutments. Lead to be let into mortar course minimum 150mm above roof level.

CAVITY WALLS: W/ cavity trays w/ water tight stop ends and weepholes. To be insulated to give a U- value of 0.20 W/MK 110mm brickwork and 100mm Durox blocks with wall ties at 450mm vertical and 900mm horizontal ctrs.
With cavity (e.g 50mm gypglass C.W 1 batts insulation board in cavity (or internal face of wall). Brick faced cavity wall 265mm w/ 75mm cavity (50mm min. residual air space) w/ insulation batts. 90mm brick face outer-leaf and
100mm breeze block inner-leaf. Internal faced 12mm rendered plaster and 3mm plaster skim to finish.

INTERNAL WALLS: Concrete/ breeze blockwork 100 or 150mm thk. w/ 12mm plaster render and 3mm plaster skim to finish to eitherside. S.W studwork 100x 50mm or 100x 100mm filled w/ 60mm insulation quilt w/ 12.5mm
plasterboard eitherside & 3mm plaster skim to finish. (Refer to plan for layout)

WINDOWS: All windows to be double-glazed and to be of a size not less than 10% of the floor area of each room. Windows are to open to provide a minimum of 20% of the floor area of each room.
Damp proof course to be provided at all reveals. Tray dpc to be provided over lintels. Background ventilation to be provided to habitable rooms by means of controllable and secure ventilation opening to have a total area no
less than 800mm2 located to draughts (trickle ventillator), hit or miss ventillator, lockable fanlight or similar. New/ replacemnet windows, doors and sidelights upto height of 150mm above floor to be in safety glass to comply
with BS 6206 Class C. Velux escape windows to be set back by 1700mm from eaves and at a height of between 800mm minimum and 1000mm maximum from floor level. Separate means of escape windows indicated on plan.
Roof escape window 600mm x 1200mm clear dimensions accessable from ground by ladder. Escape window to be top hung. All double glazed windows and doors to comply with new 'Fensa' guidelines fro performance.

WARM DECK: Construction to be covered with 12mm thick mineral chippings in hot bitumen over 3 layers of roofing felt complying with BS 747 all set in hot bitumen over 12mm thick Jabdec roof insulation board (fibreboard surface to upper
face) laid and jointed to manufacturers recommendations over felt type 1b vapour barrier bedded in hot bitumen over 18mm marine ply on firrings to provide fall 1 in 60 on joists (size and ctrs. as pler plan) 12.5mm plasterboard ceiling
with plaster skim. No ventilation provided to roof.
(Note: Where flat roof is lower than an adjacent neighbouring fist roof 2x plasterboard layers to be installed to give a one hour period of fire resistance).

VENTILATION: All habitable rooms to have minimum background ventillation of 800mm square trickle vent. Mechanical ventiliation to be provided to bathroom/ shower room having an output of at least 15litres/ second ducted to external air.
Mechanical ventillatiion to be provided to kitchen having an output of at least 50 litres/ second ducted direct to external air. Mechanical ventilation to be provided to WC compartment having an output equivalent to 3 air changes per hour with
15min. overrun connected to light switch and ducted direct to extenal air. Mechanical ventillation to utility room to provide extract rate of 30 litres/ second.

STEEL WORK: Steel work to structural calculations. Steel beams to be encassed with two layers of 12.5mm plasteboard fixed to 50mm x 25mm timber cradle with 7mm of gypsum plaster. Beams to rest on concrete pad satones minimum bearing
of 100mm. Twin beams to be diaphragm bolted together spaced at 900mm ctrs. Steel beams: Encased in concrete to be wrapped in 6mm dia. M.S links at 225mm horizontal ctrs. And encased in minimum 50mm concrete cover to all surfaces.

LATERAL AND VERTICAL RESTRAINT: To external wall Bat patent restraint straps at maximum 1800mm ctrs. Up to first floor level and at max 1200 ctrs. above floor level. Fixing of straps to joists as per manufacturesrs recommendations
according to exposure rating and to conform to B.S CP112

UPPER FLOORS/ CEILING: Timber floor joists fixed to restraint type joist hangers and bed directly on blockwork. to be 25mm t&g s.w boards floor grade chipboard (grade 11/111 to B.S 5669) secured to floor joists (as indicated on plans).

EXISTING CEILINGS: To be confirmed onsite as 12.5mm plasterboard and skim finish. Install 100mm mineral fibre insulating between all ceiling joists.

FLOORS BETWEEN FLATS/ LOFTS: Provide one hour fire resistance to flat, loft room floor. Install 100mm mineral fibre insulating between all new floors fixed to the sides of the joits as specified. in BRE DIGEST 2087 (e.g. Mesh basket
to hold mineral fibre insulating material).

SOUND INSULATION- PARTY FLOORS: 2 layers (total 24mm thick) Cement bonded particle board, glued & screwed together w/ joints staggered. On 25mm mineral fibre (w/ density 60-100 KG/M2). On 12mm timber boarding nailed to joists.
100mm insulation quilt between (w/ density of 10 KG/ M2 min). 2 layers of plasterboard (30mm total thk. min. w/ staggered joints) w/ plaster skim to finish.
PROPOSED DOMESTIC STAIRS: Staircase to be minimum 800mm clear width (w/ treads and risers as indicated on plans). Maximum riser 220mm x going 220mm to give a maximum pitch of 42degrees. Minimum headroom 2000mm measured
vertically from pitch line (line of joining nosings). Handrail to be provided to one side securely fixed at 900mm above pitch line. Landings minimum 800mm square. Tapered treads to be uniform with treads and risers measured at centre point.
Minimum going tapered to 50mm. No gap in balustrade , treads or goings greater than 100mm.

AUTOMATIC SMOKE DETECTORS: To be fitted to L3 system BS 5859 part 1 1989. Detectors to be fitted/ positioned 1)In hallway near front door 2)1 on each landing 3) In loft room, extension.
FIRE DOORS: Front door FD30 (3no. 100mm s/steel hinges. Door viewer, key operated auto deadlock, restraint arm or chain & letterplate). Doors to habitable rooms, kitchen & bath FD20 & Self- closing. Cupboard doors FD20 self- closing.

FIRE RESISTING CONSTRUCTION: Between flats one hour min. fire resisting construction. Hall walls half hour min. fire resisting construction. Emergency lights fitted on each communal landing/ hallway as part of escape route. Underside of stairs
one hour min. fire resisting construction. Existing doors and partitions to staircase to be solid with no glazing (otherwise incorp. fire rated safty glass. Consult Building Control Officer). Plasterboard joints staggered, taped & filled wall/ceiling
junction layers should be alternate to form 'Z' joint. All masonry joints properly filled w/ mortar. All junctions floors, walls, ceilings & roof coverings adequtately fire stopped with non combustable material to form appropriate fire rating.

STUDIO 1
Interior- Architects, Retail design & Project Managers

Drawing: PROPOSED PLANS/ELEVATION/SECTIONS			**Status:** PLANNING
Project: FLAT 1/26 FORTUNE GREEN RD NW6		**Client:** WENDY COSTELLO	
Scale: 1:50/ 1:100	**Date:** 24 FEB 05	**Drawing No:** 002	**Revision:** A/ 18th May

All works carried out with section, notes and Building Regulations. Copyright reserved. All dimensions taken as approved by client. Drawing taken as approved by client. Do not scale dimensions checked onsite. The owner may require consent from Thames Water to build over or near any sewers within their property. Consult your Local Authority & Building Control Office prior to commencing work. Contractor to adhere to current Building Regulations and apply any relevant changes. Inform Architects.

67a Compton Road, Winchmore Hill, London N21 3NU Tel:0208 364 0057/ 07967 473 648 Fax:0208 364 0057