EXISTING ENTRANCE ELEVATION

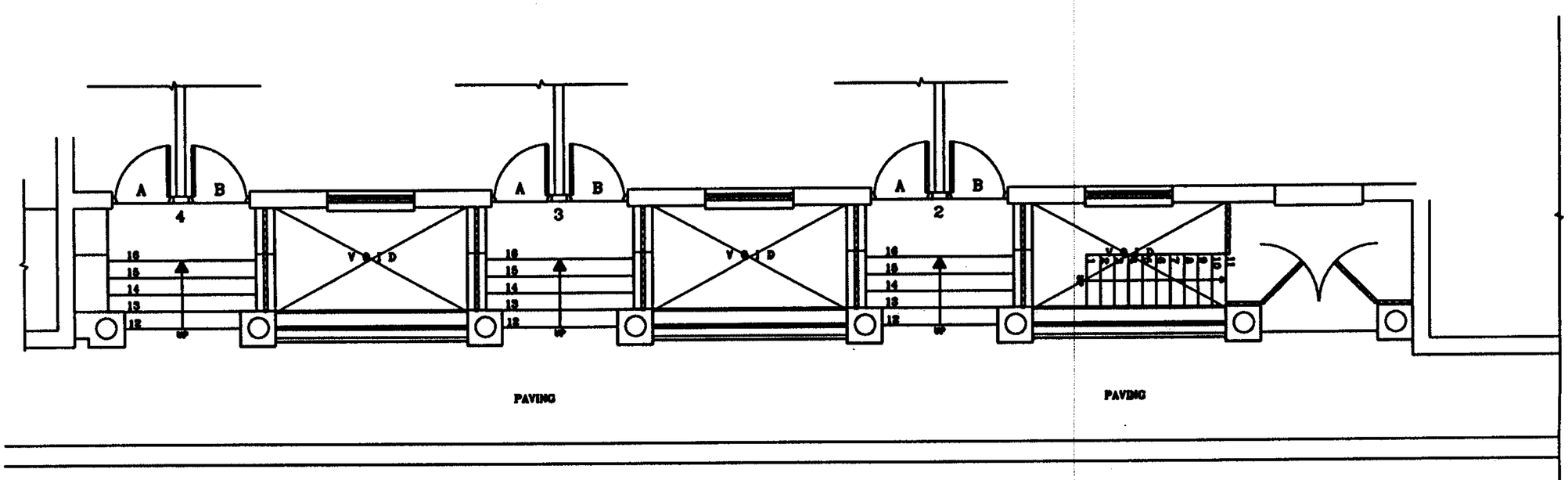

L I T T L E R U S S E L L S T R E E T

EXISTING ENTRANCE PLAN

Kuma Environmental Design Limited.
Chartered Architects, Interior & Urban Designers
76 BEULAH ROAD
Thornton Heath. Tel: 020 8653 0220
Surrey CR7 8LF Fax: 020 8653 0230

CLIENT: COMMUNITY HOUSING ASSOCIATION

PROJECT: 1 LITTLE RUSSELL STREET
LONDON WC1

TITLE: EXISTING GROUND FLOOR ENTRANCE PLAN AND ELEVATION

REV	ITEM:	DWG NO:
SCALE: 1 : 100	DATE: MARCH 2006	02
DRAWN BY: AKWA	JOB NO: CHA/K06/02	REV:

PROPOSED ENTRANCE ELEVATION

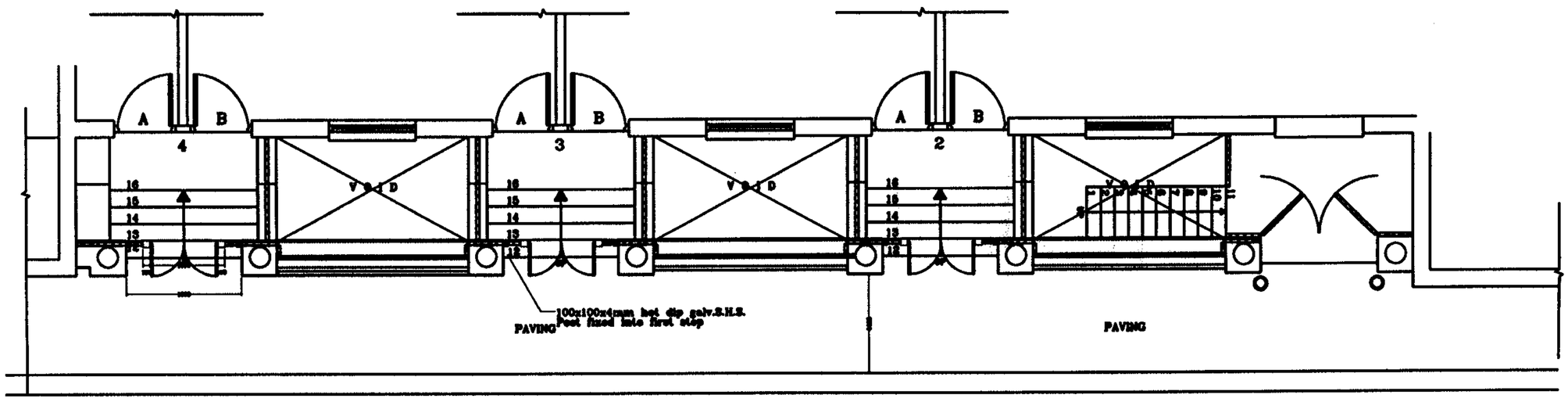

L I T T L E R U S S E L L S T R E E T

PROPOSED ENTRANCE PLAN

Kuma Environmental Design Limited. Chartered Architects, Interior & Urban Designers	CLIENT: COMMUNITY HOUSING ASSOCIATION	REV	ITEM:	DWG NO:
	PROJECT: 1 LITTLE RUSSELL STREET LONDON WC1	SCALE: 1 : 100	DATE: MARCH 2006	03
76 BEULAH ROAD Thornton Heath. Tel: 020 8653 0220 Surrey CR7 8LF Fax: 020 8653 0230	TITLE: PROPOSED GROUND FLOOR ENTRANCE PLAN AND ELEVATION - OPTION 2	DRAWN BY: AKWA	JOB NO: CHA/K06/02	REV:

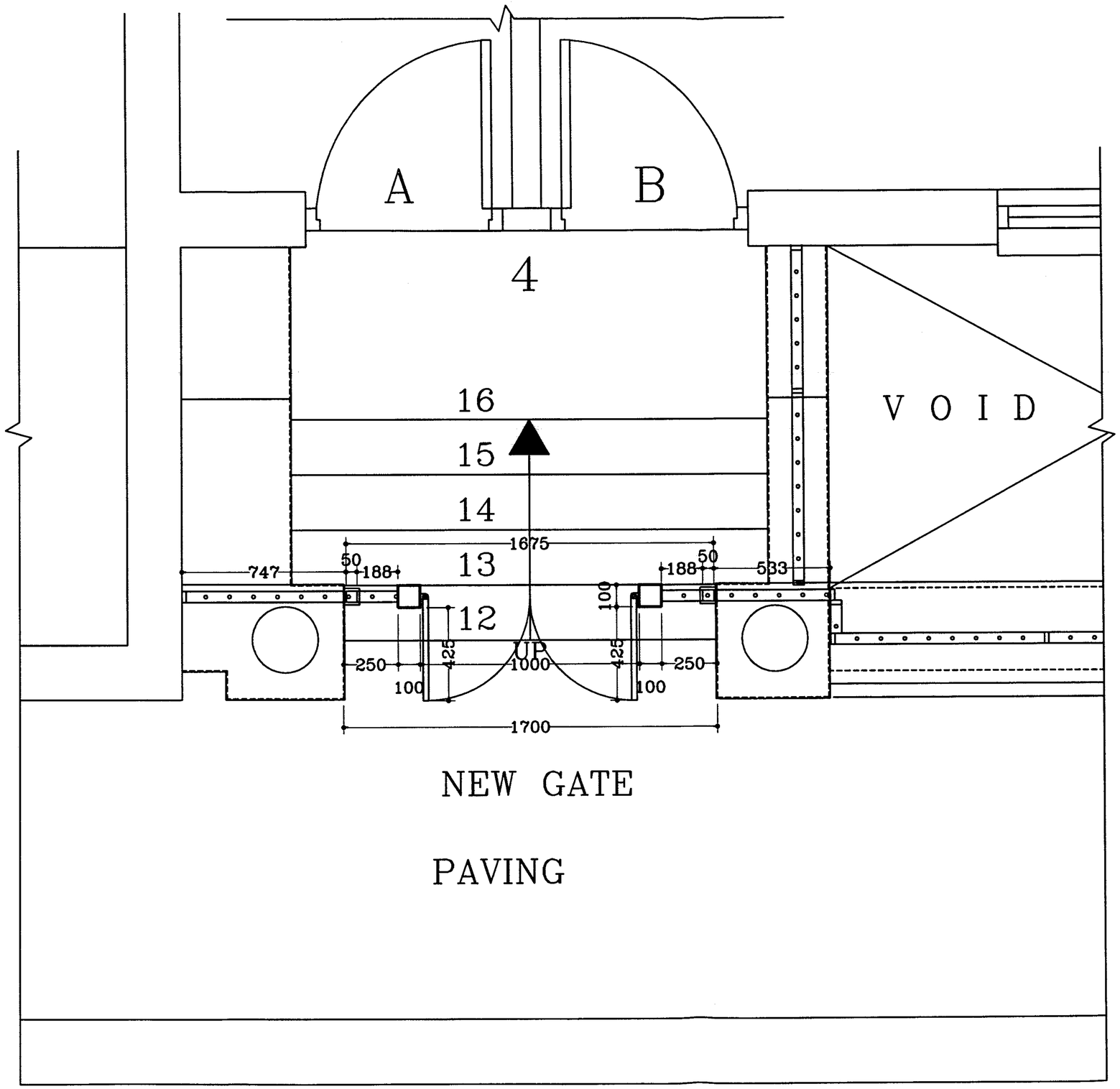

DWG NO:	04
REV:	
ITEM:	
DATE:	OCT '98
JOB NO:	CHA/K06/02
REV	
SCALE:	1 : 20
DRAWN BY:	AKWA
CLIENT:	COMMUNITY HOUSING ASSOCIATION
PROJECT:	1 LITTLE RUSSEL STREET LONDON WC1
TITLE:	ENTRANCE GATE PLAN- OPTION 2

Kuma Environmental Design Limited.
Chartered Architects, & Development Consultants
76 Beulah Road
Thornton Heath.
Surrey CR7 8JF
Tel: 020 8653 0220
Fax: 020 8653 0230

50x50x2mm hot dip galv. m.s.
Horizontal & vertival gate frame
fixed to 100x100mm gal. m.s rectangular
posts with m.s steel panels on either side

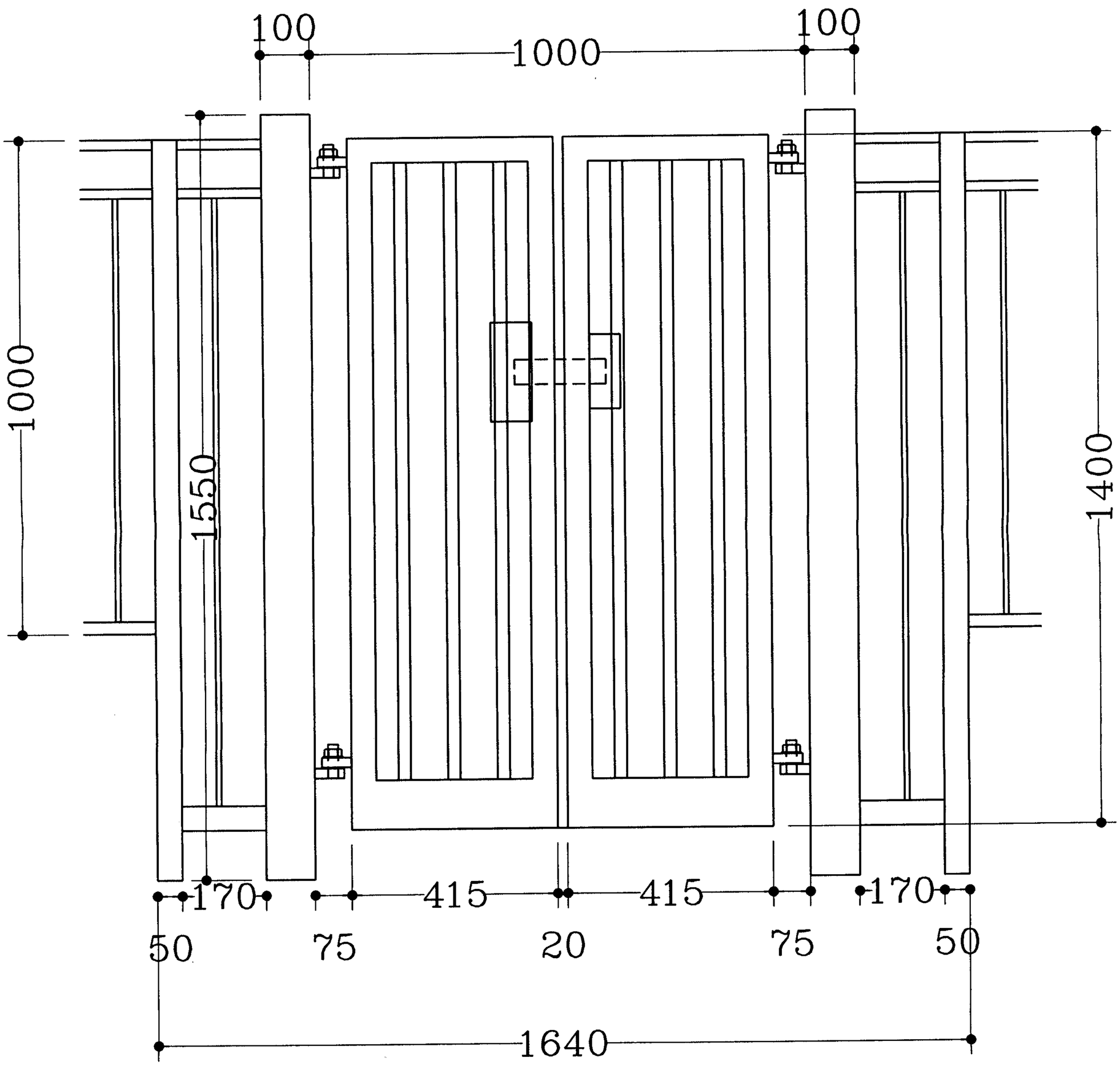

Kuma Environmental Design Limited.
Chartered Architects, & Development Consultants
76 Beulah Road
Thornton Heath.
Surrey CR7 8JF
Tel: 020 8653 0220
Fax: 020 8653 0230

CLIENT:	COMMUNITY HOUSING ASSOCIATION
PROJECT:	1 LITTLE RUSSEL STREE LONDON WC1
TITLE:	PEDESTRIAN ENTRANCE SECURITY GATE
REV	
SCALE:	1 : 10
DRAWN BY:	AKWA
ITEM:	
DATE:	FEB. 2006
JOB NO:	CHA/K06/02
DWG NO:	05
REV:	

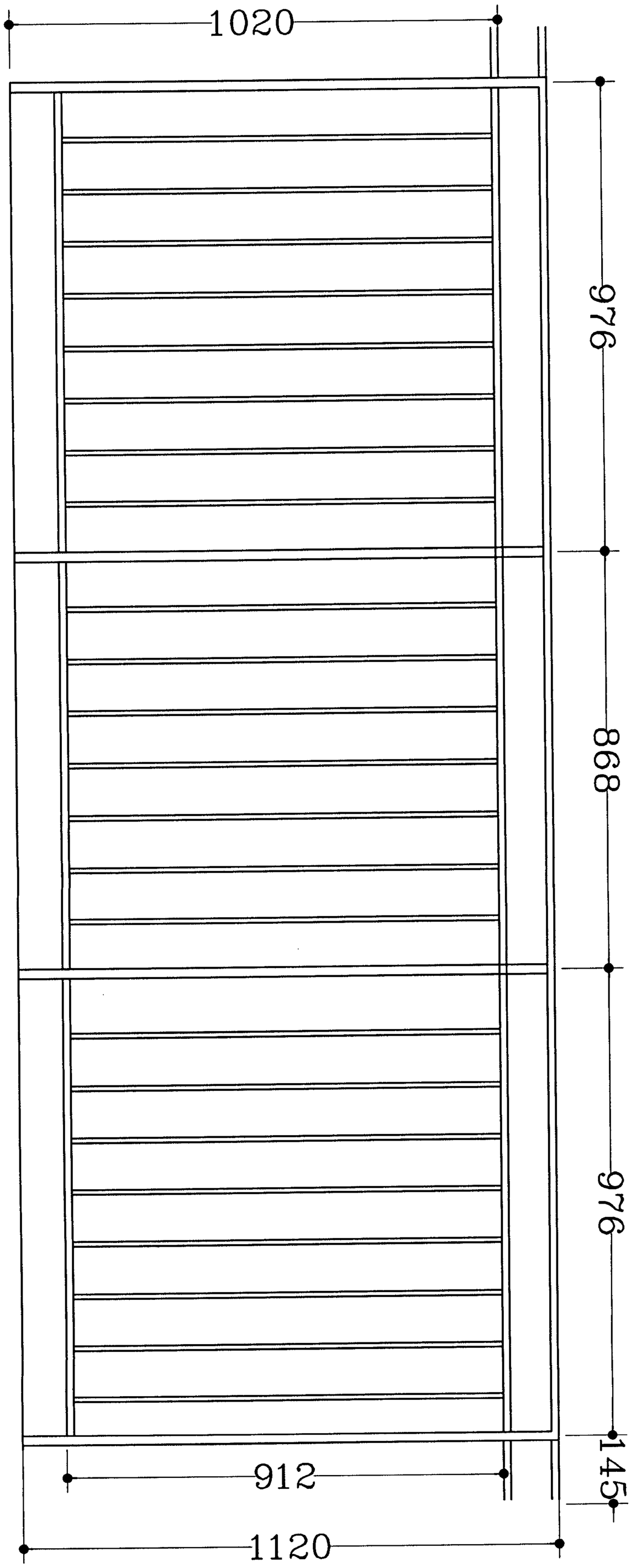

Kuma Environmental Design Limited.
Chartered Architects, & Development Consultants
76 Beulah Road
Thornton Heath.
Surrey CR7 8JF
Tel: 020 8653 0220
Fax: 020 8653 0230

CLIENT: COMMUNITY HOUSING ASSOCIATION

PROJECT: 1 LITTLE RUSSEL STREE
LONDON WC1

TITLE: PROPOSED STEEL RAILINGS TO MATCH EXISTING

REV	ITEM:	DWG NO:
SCALE: 1 : 10	DATE: FEB. 2006	06
DRAWN BY: AKWA	JOB NO: CHA/K06/02	REV: