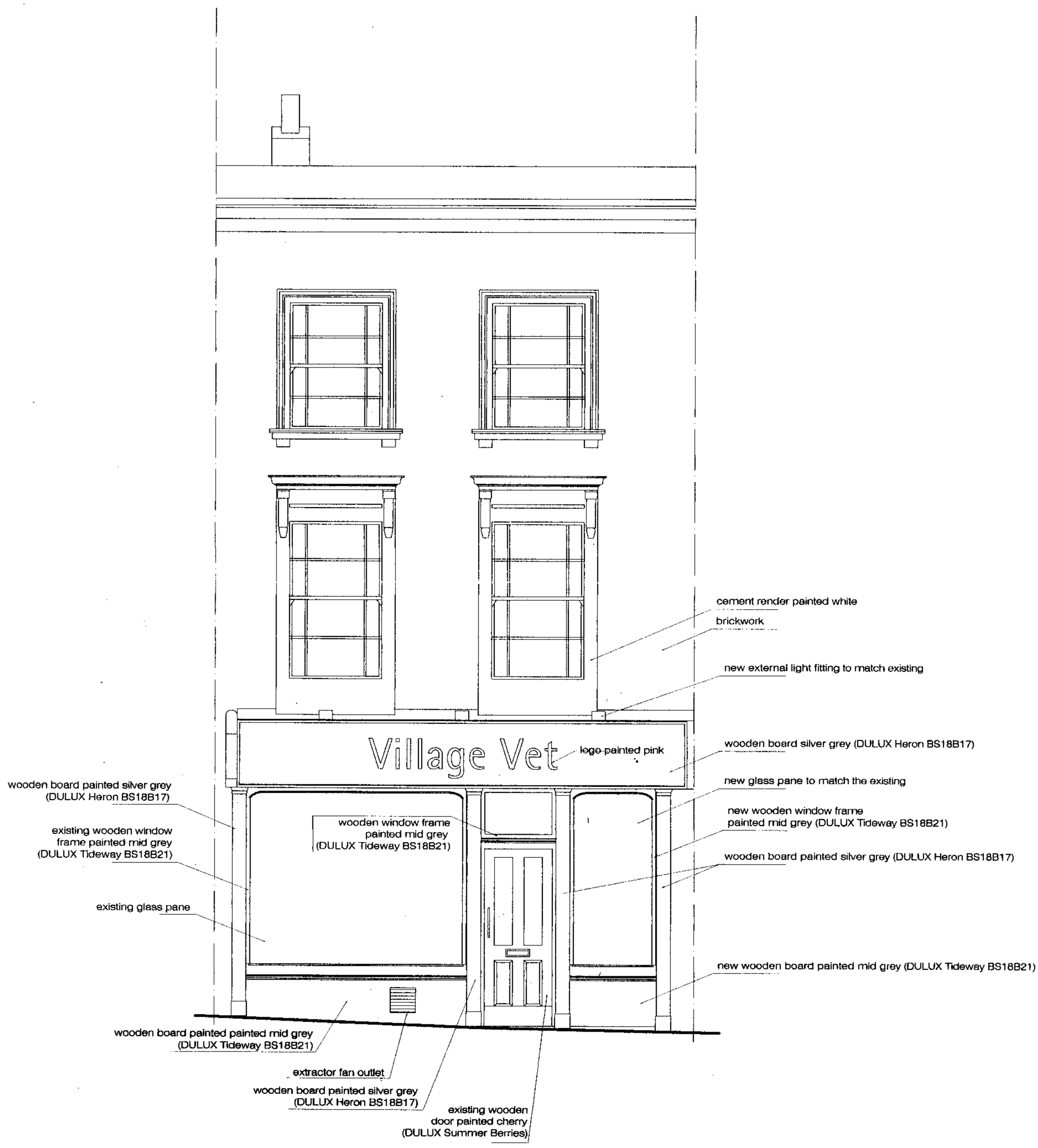

PROPOSED EXTERNAL ELEVATION

SCALE 1:50

SCHNEIDER DESIGNERS

15 eldon grove london, nw3 5pt tel 0207.4357105 fax 0207.4357108

project	drawing title
Belsize Lane, NW3	Proposed external Elevation

scale	date	project no.	drawn by	drawing no.	revision
1:50	14.02.2005	0422	mg	PP-03	***

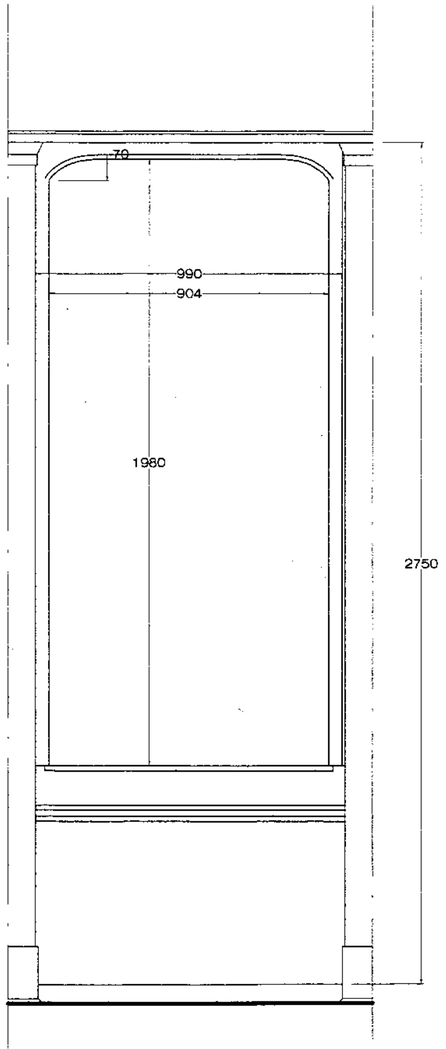

NEW WINDOW ELEVATION SCALE 1:20

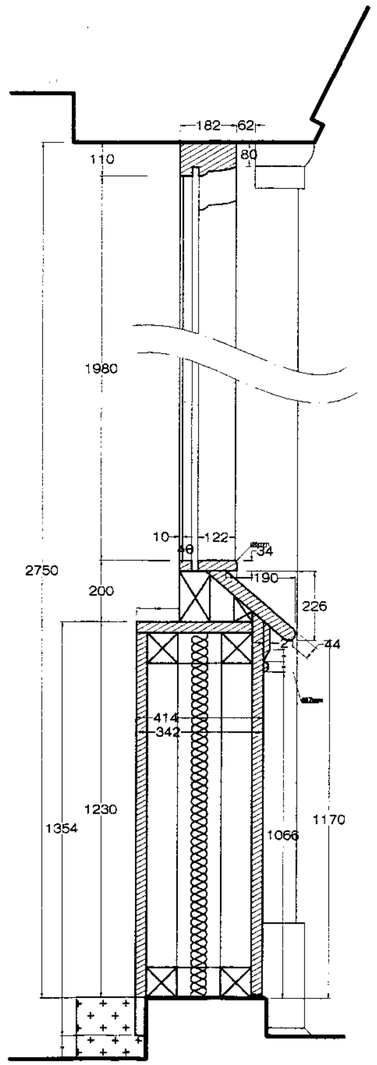

NEW WINDOW SECTION A

SCALE 1:20

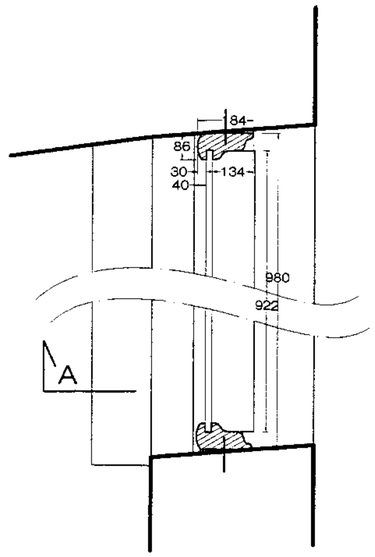

NEW WINDOW PLAN

SCALE 1:20

SCHNEIDER DESIGNERS ■
15 eldon grove london, nw3 5pt tel 0207.4357105 fax 0207.4357108

project 11 Belsize Terrace, NW3		drawing title New window details	
scale 1:20	date 07.02.05	project no. 0422	drawing no. PP-04
		drawn by mg	revision ***