GFA ref Slade/Detail Components

This drawing is copyright. All dimensions to be checked on site. Do not scale. This drawing shows Design intent only.

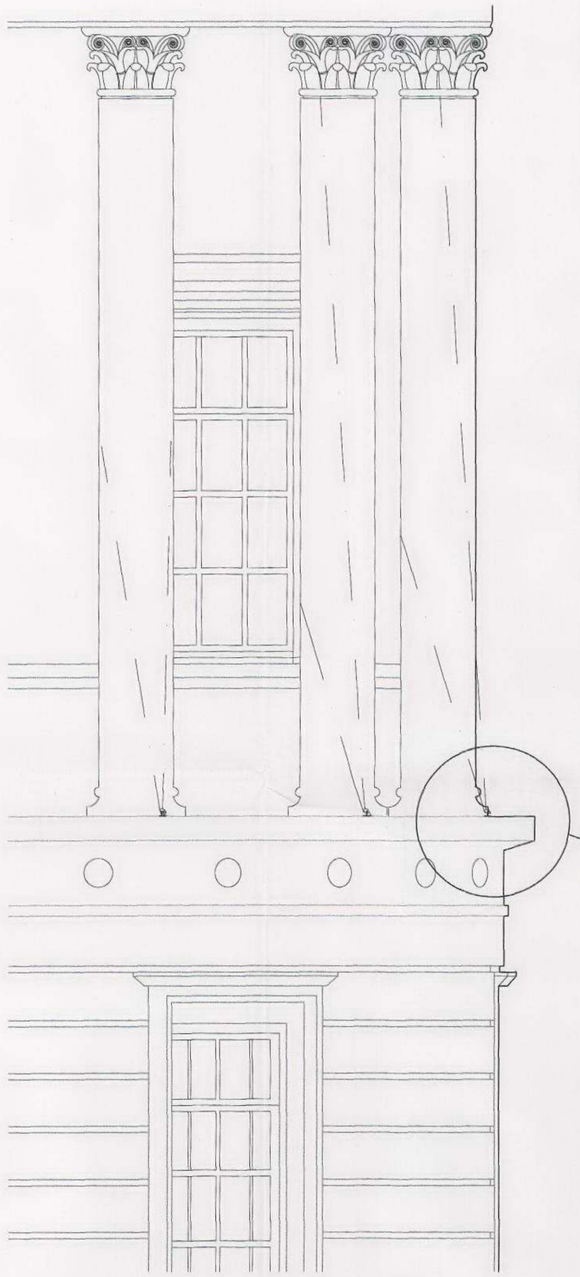

Side elevation of Slade rotunda 1:25

Fittings nestle between columns using ledge to hide from observers at Quad level

Cable routes (as existing) on ledge to avoid being visible from Quad.

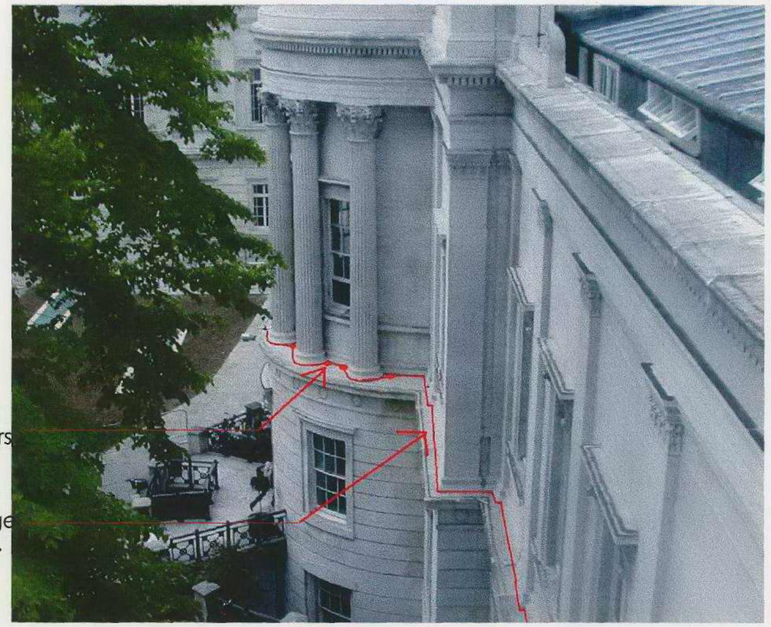

LED light cabling route detail at Rotunda

Cross section Detail A (below) 1:5

CLF 2960 2w Luxeon LED spotlight
Cable surface mounted on the external ledge, neatly close to the columns. All fixings are concealed. Light fittings are small in size, and the protruding ledge reduces the visibility from the Quad level

Similar treatment for the rotunda at South Wing Building.

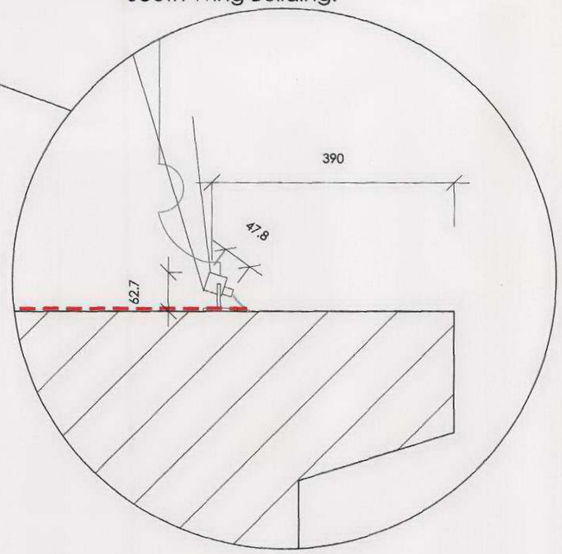

PROPOSED LIGHTING DETAILS

Slade and South Wing Rotunda Lighting Detail for University College London

GAUNT FRANCIS
ARCHITECTS
London & Cardiff
21A Bruton Place
Berkeley Square
London W1J 6NR
Tel: 020 7629 3993
Fax: 020 7629 2993

Dwg No AD(20)04
Date July 2006
Scale 1:25 @ A1

GFA ref Slade/Detail Components

This drawing is copyright. All dimensions to be checked on site. Do not scale. This drawing shows Design Intent only.

Cross section typical doorway 1:20

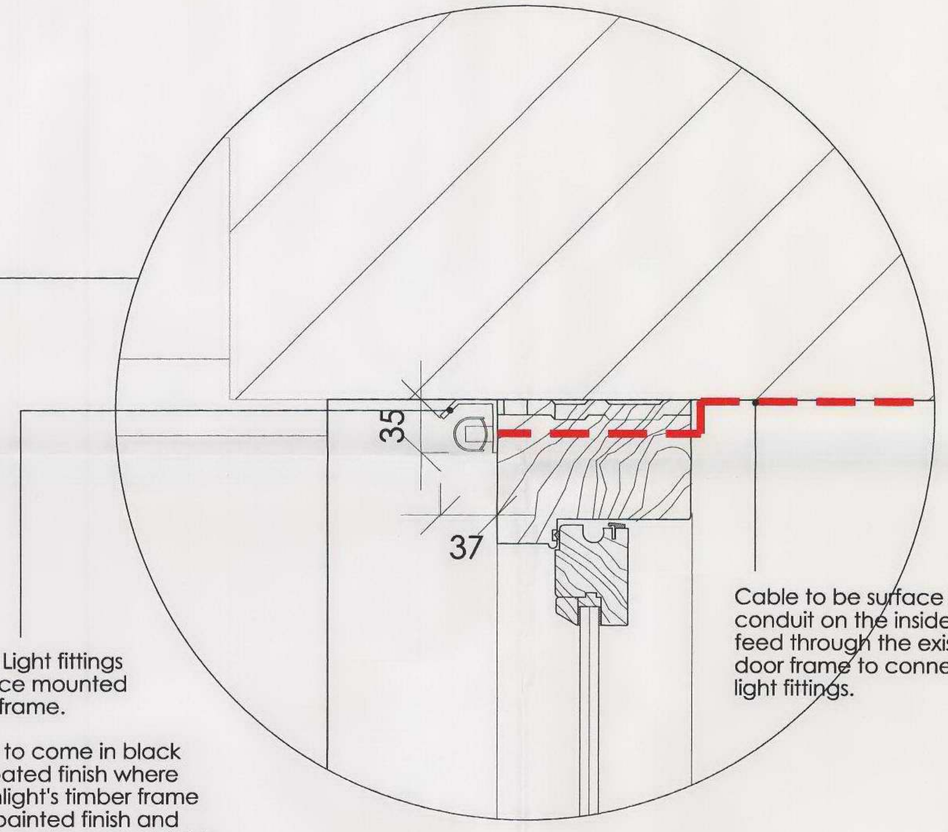

Agebekov Light fittings to be surface mounted to fanlight frame.

Light fitting to come in black powder coated finish where existing fanlight's timber frame is in black painted finish and soft white powder coated finish where existing fanlight's timber frame is in white painted finish

Cable to be surface mounted conduit on the inside wall and feed through the existing timber door frame to connect to the light fittings.

Detail Y 1:10

PROPOSED LIGHTING DETAILS

Typical Doorway Lighting Detail for University College London

GAUNT FRANCIS
ARCHITECTS
London & Cardiff
21A Bruton Place
Berkeley Square
London W1J 6NB
Tel: 020 7629 3993
Fax: 020 7629 2953

Dwg No AD(2)0 02 Rev A
Date July 2006
Scale 1:20 @ A1

GFA ref. Scale/Detail Components

This drawing is copyright. All dimensions to be checked on site. Do not scale. This drawing shows Design Intent only.

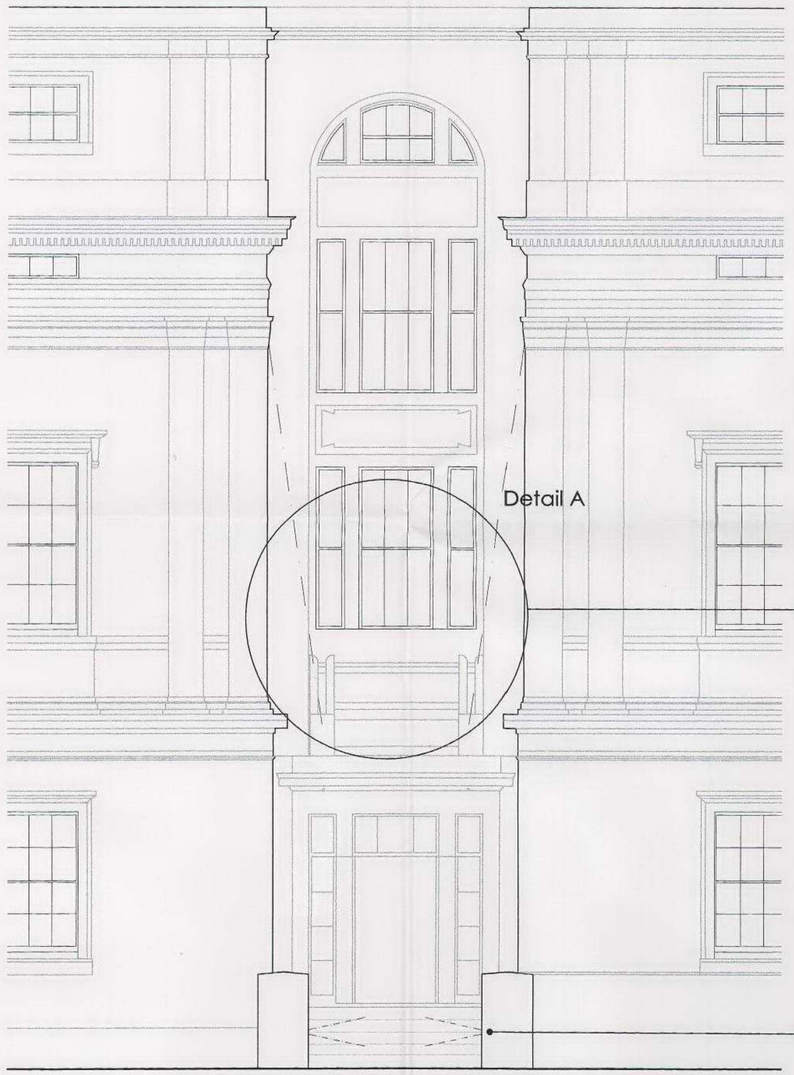

Pearson and Chadwick
Side elevation 1:50

Stone facing creates void for lights above

Cable route to be along the ledge fitted neatly as existing routes around the Quad. These are not visible from the Quad.

The light fittings, a pair of flood lights will light the opposing side walls of the recess above the main entrance to Pearson. This will avoid glare on the windows by lighting the perpendicular surfaces.

The fittings to be fixed discreetly in a void above the porch. All fixings to be used are concealed. The entrance to Chadwick (opposite) will be treated in the same manner.

1606 box 1 . diffuser in scored matt polycarbonate to replaced existing light fittings

Recessed in wall on either side of steps from main entrances to both Chadwick and Pearson buildings. Cable routes are existing.

Detail A
Light fittings cabling route detail

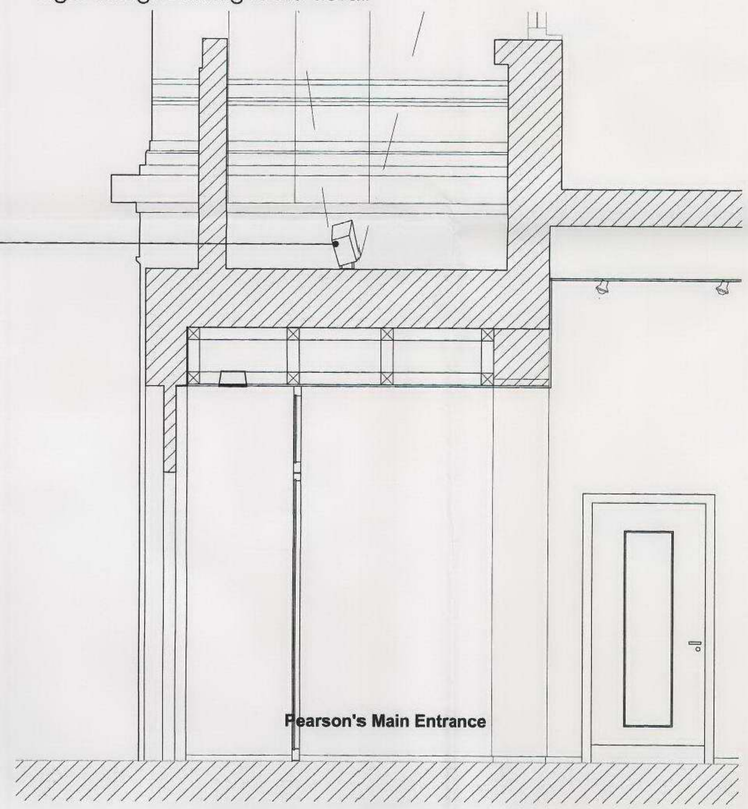

Cross section above Pearson and Chadwick's porch 1:25

PROPOSED LIGHTING DETAILS

Pearson and Chadwick's above Porch Details for University College London

GAUNT FRANCIS
ARCHITECTS
London & Cardiff
21A Bruton Place
Berkeley Square
London W1J 6NB
Tel: 020 7629 3993
Fax: 020 7629 2953

Dwg No AD1210.03
Date July 2006
Scale 1:25 @ A1

GFA ref Slade/Detail C mpon nts

Th drawing c pyright All dim nsi ns to be checked site Do not scale Th drawi g shows Desig Intend ly

Note
All light fittings to refer to Max Fordham's lighting schedule no J3826/V[21]-500 rev A

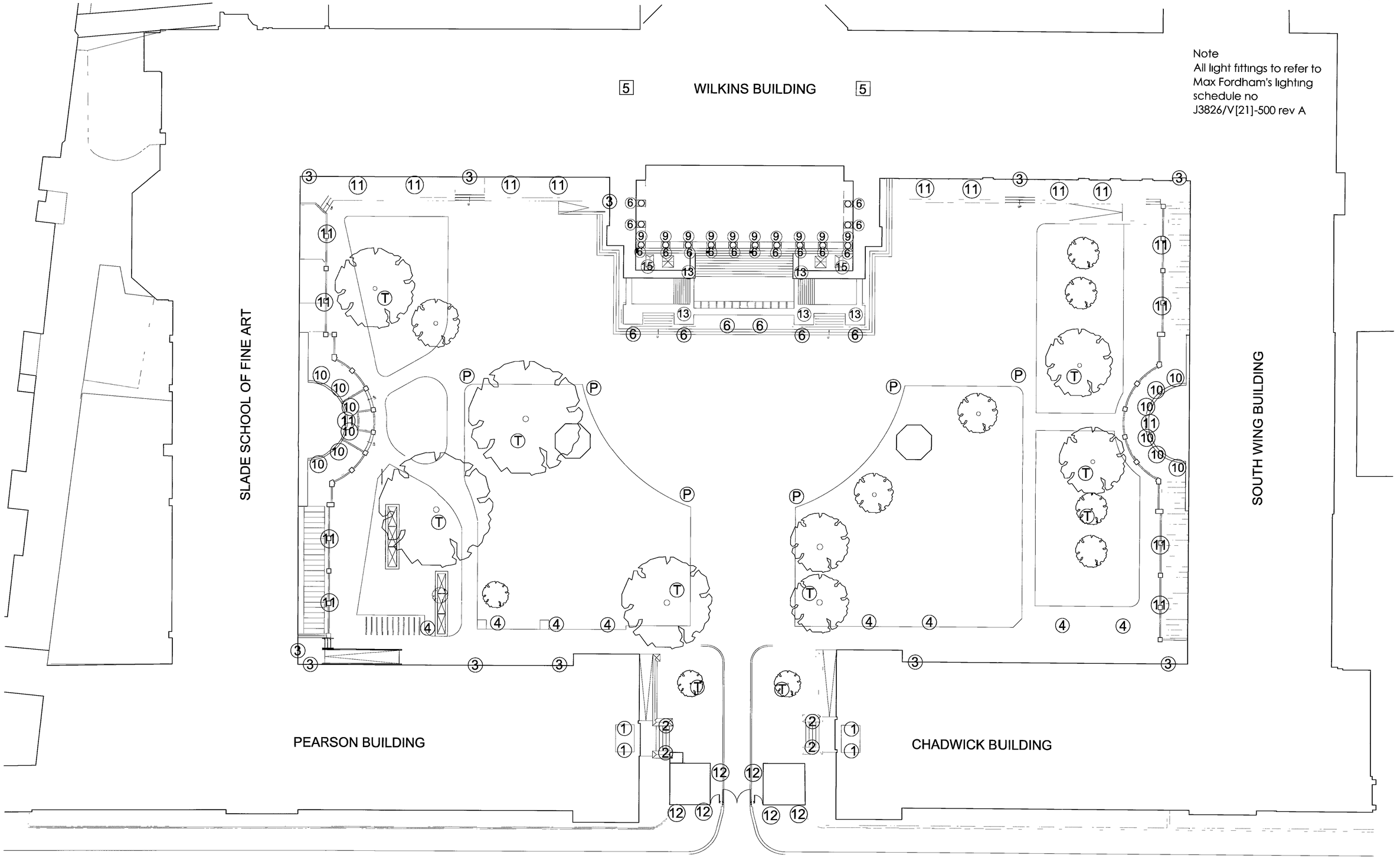

PROPOSED PLAN OF QUADRANGLE LIGHTING

for University College London

N

GAUNT FRANCIS
ARCHITECTS
L d & Co ff
21A Bruton Pla e
Berkeley Square
London W1J 6HB
Tel 020 7629 3993
Fax 020 7629 2903

Dwg N AP(2)1 01
Date July 2006
Scale 1 200 @ A1

GFA ref Slade/Detail Components

This drawing is copyright. All dimensions to be checked on site. Do not scale. This drawing shows Design Intent only.

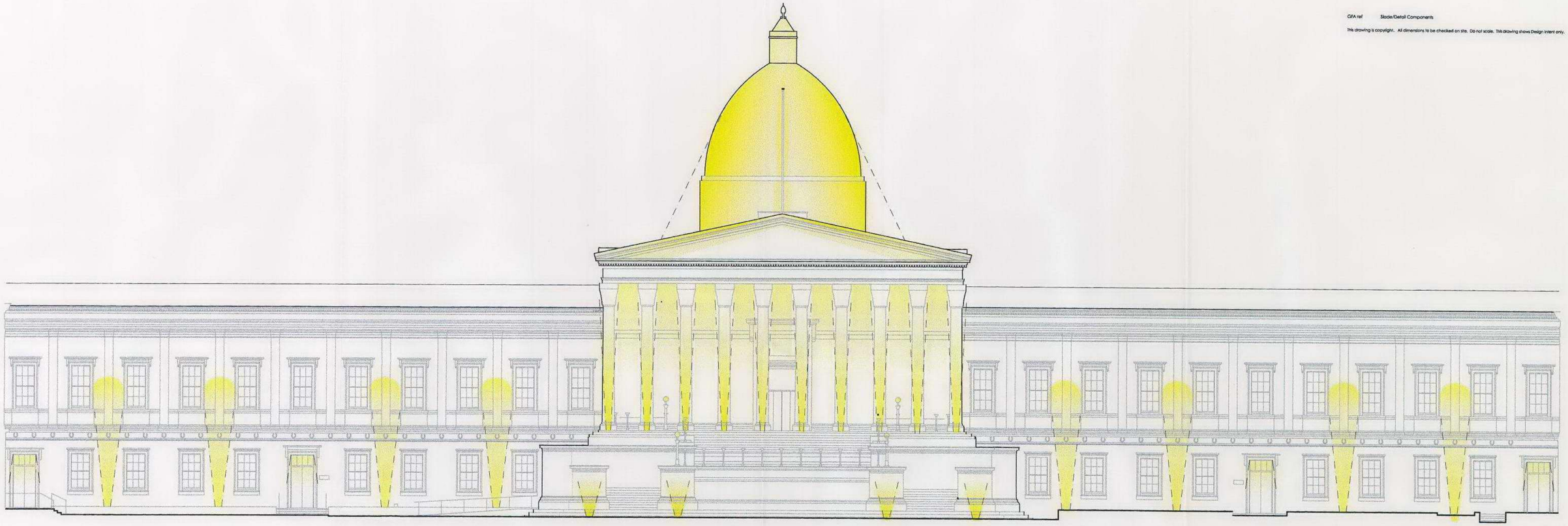

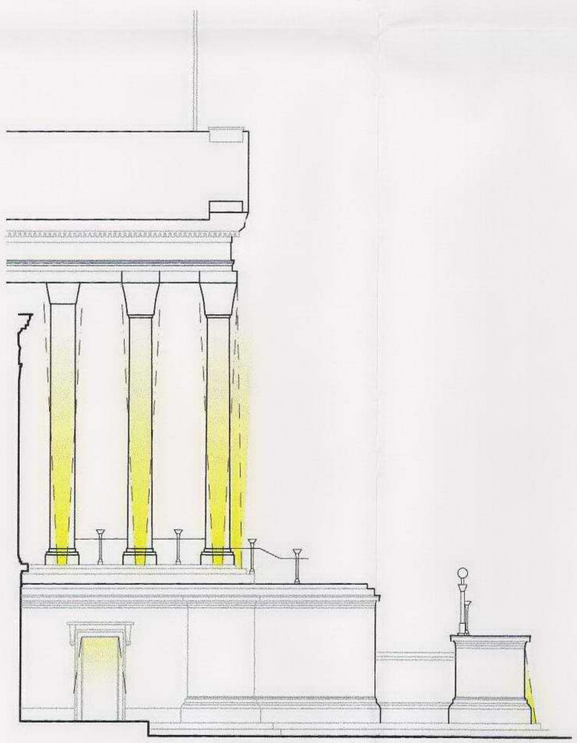

PROPOSED ELEVATIONS of WILKINS BUILDING

for University College London

GAUNT FRANCIS
ARCHITECTS
London & Cardiff

21A Brulon Place
Berkeley Square
London W1J 6HB
Tel: 020 7629 2993
Fax: 020 7629 2953

Dwg No AE(2)0.01
Date July 2006
Scale 1:100 @ A1

GFA ref Slade/Detail Components

This drawing is copyright. All dimensions to be checked on site. Do not scale. This drawing shows Design intent only.

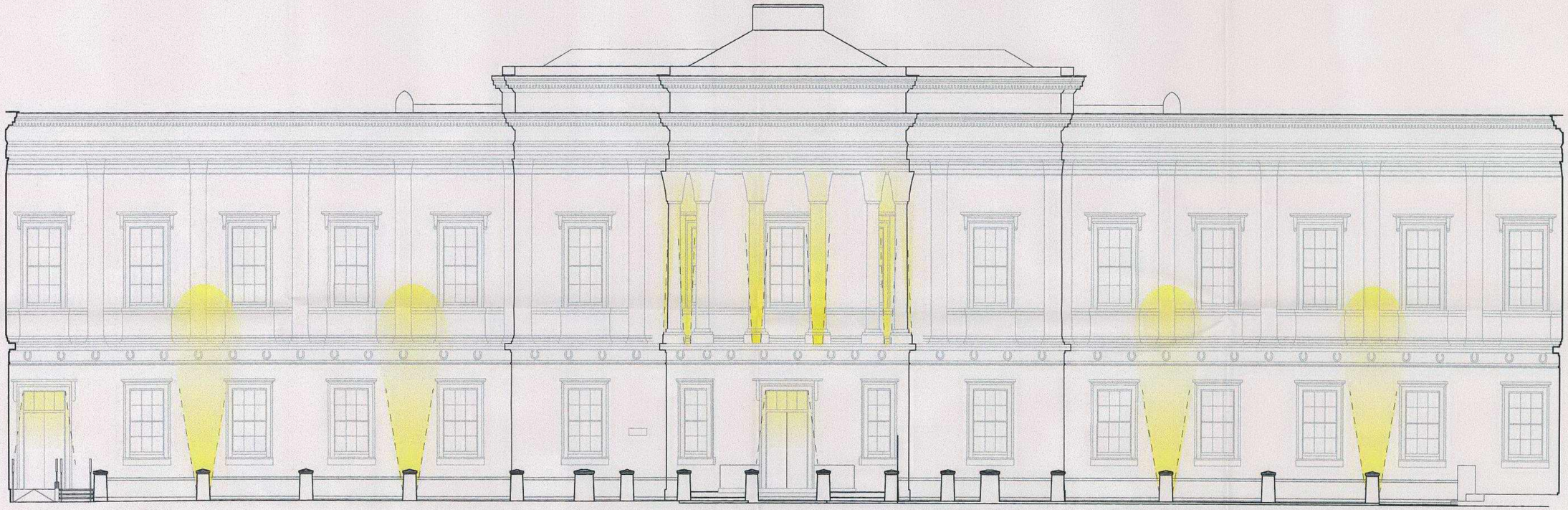

PROPOSED SLADE ELEVATION

for University College London

GAUNT FRANCIS
ARCHITECTS
London & Cardiff

21A Bruton Place
Berkeley Square
London W1J 6NR
Tel: 020 7629 3993
Fax: 020 7629 2953

Dwg No AE/210 03
Date July 2006
Scale 1:100 @ A1

GFA ref Slade/Detail Components

This drawing is copyright. All dimensions to be checked on site. Do not scale. This drawing shows Design Intx

Cross section typical doorway 1:20

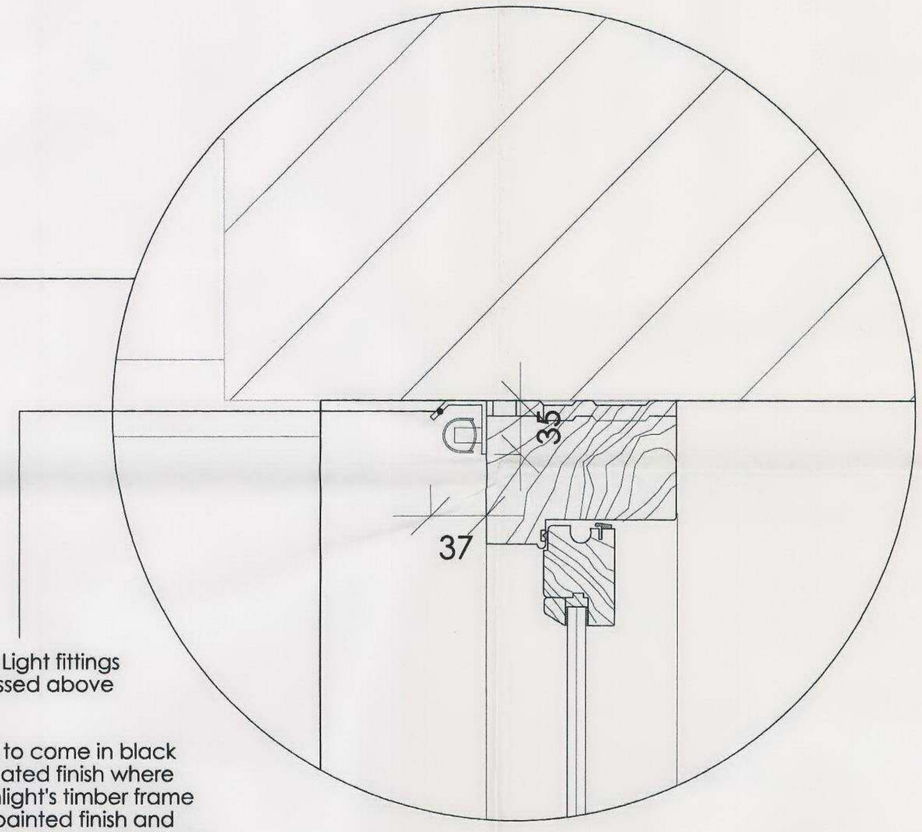

Agebekov Light fittings to be recessed above doors.

Light fitting to come in black powder coated finish where existing fanlight's timber frame is in black painted finish and soft white powder coated finish where existing fanlight's timber frame is in white painted finish

Detail Y 1:10

PROPOSED LIGHTING DETAILS

Typical Doorway Lighting Detail for University College London

GAUNT FRANCIS ARCHITECTS
London & Cardiff
21A Bruton Place
Berkeley Square
London W1J 6NB
Tel: 020 7629 3993
Fax: 020 7629 2953

Dwg No AD(2)0 02
Date July 2006
Scale 1:20 @ A1

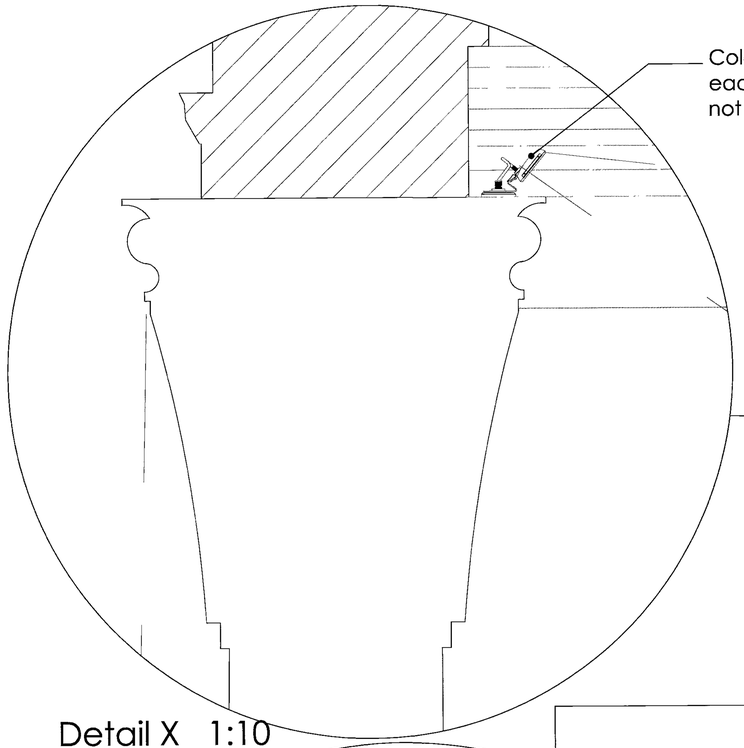

Detail X 1:10

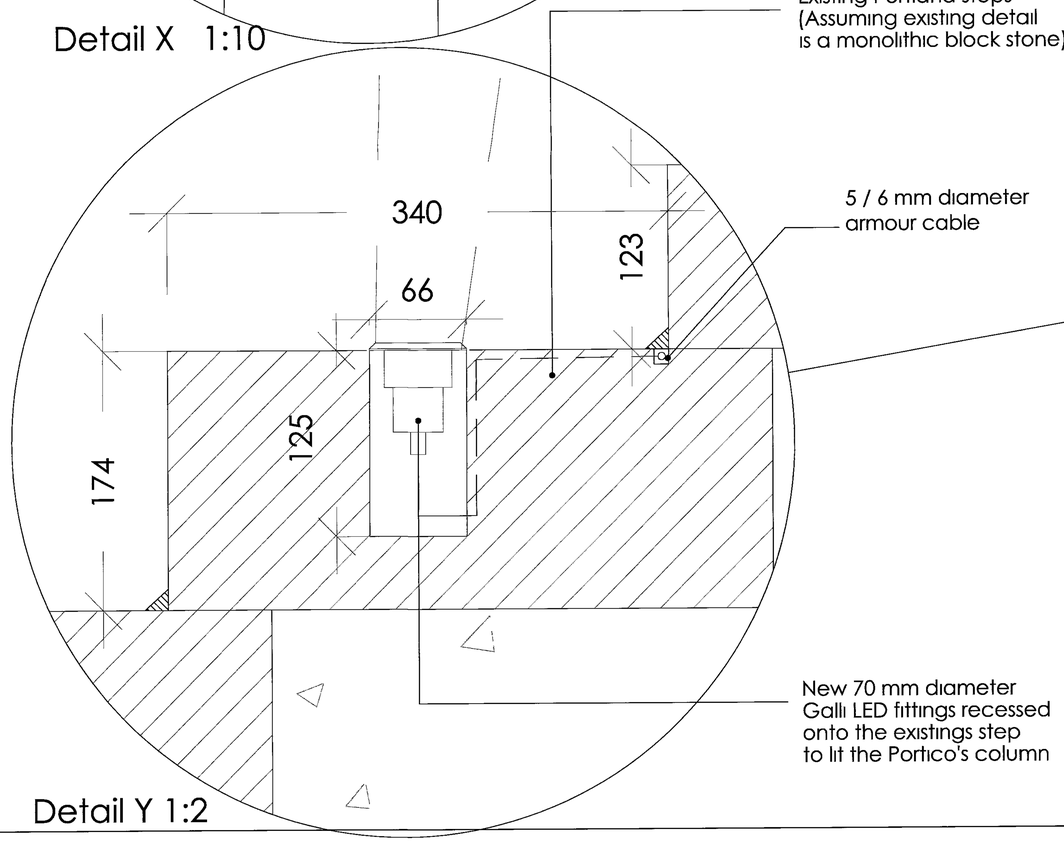

Detail Y 1:2

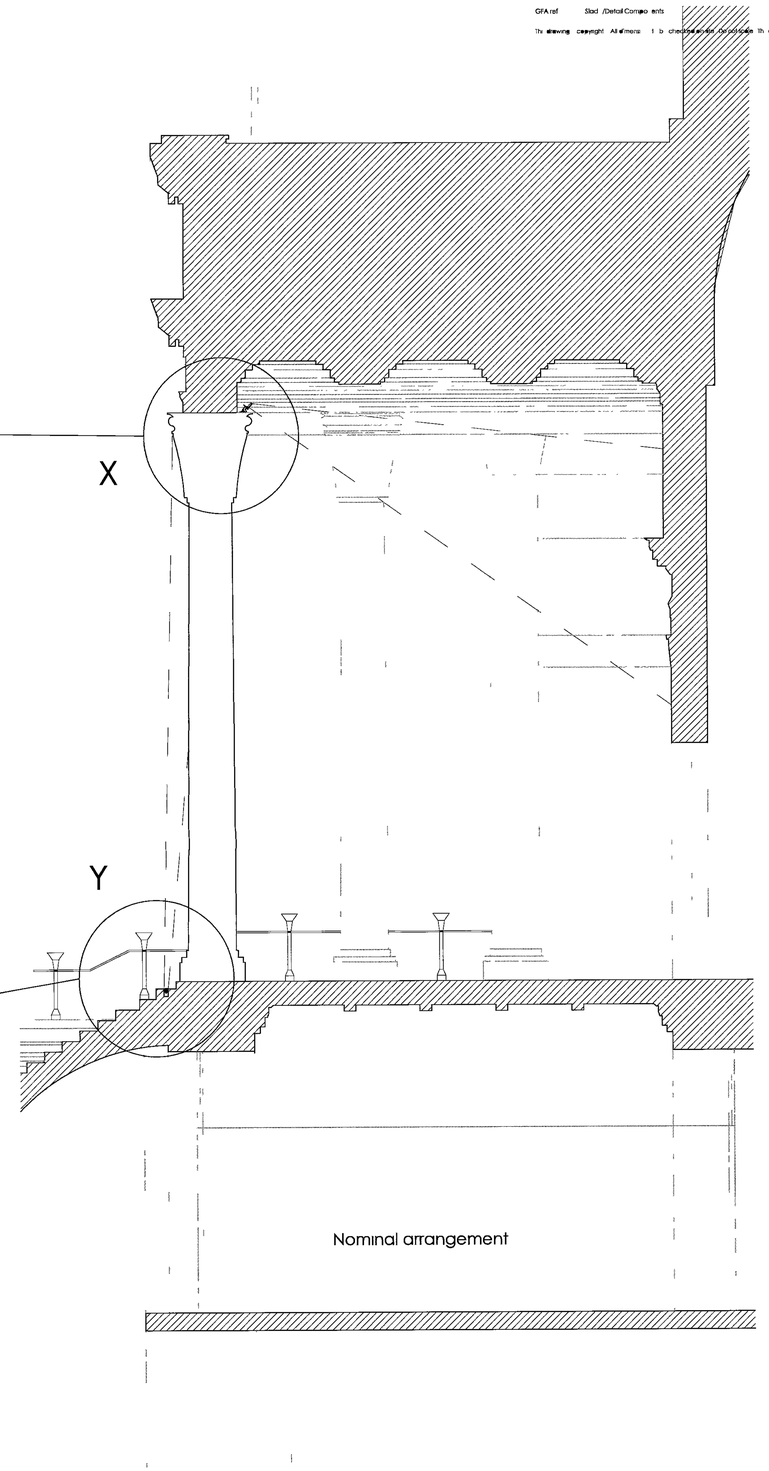

Cross section Portico area 1:50

PROPOSED LIGHTING DETAILS

Lighting Details at Portico

for University College London

GAUNT FRANCIS
ARCHITECTS
Ltd & Cardiff
21A Bruton Place
Berkeley Square
London W1J 6NB
Tel. 020 7629 3993
Fax 020 7629 2953

Dwg No A0/210.01
Date July 2004
Scale 1:50 @ A1