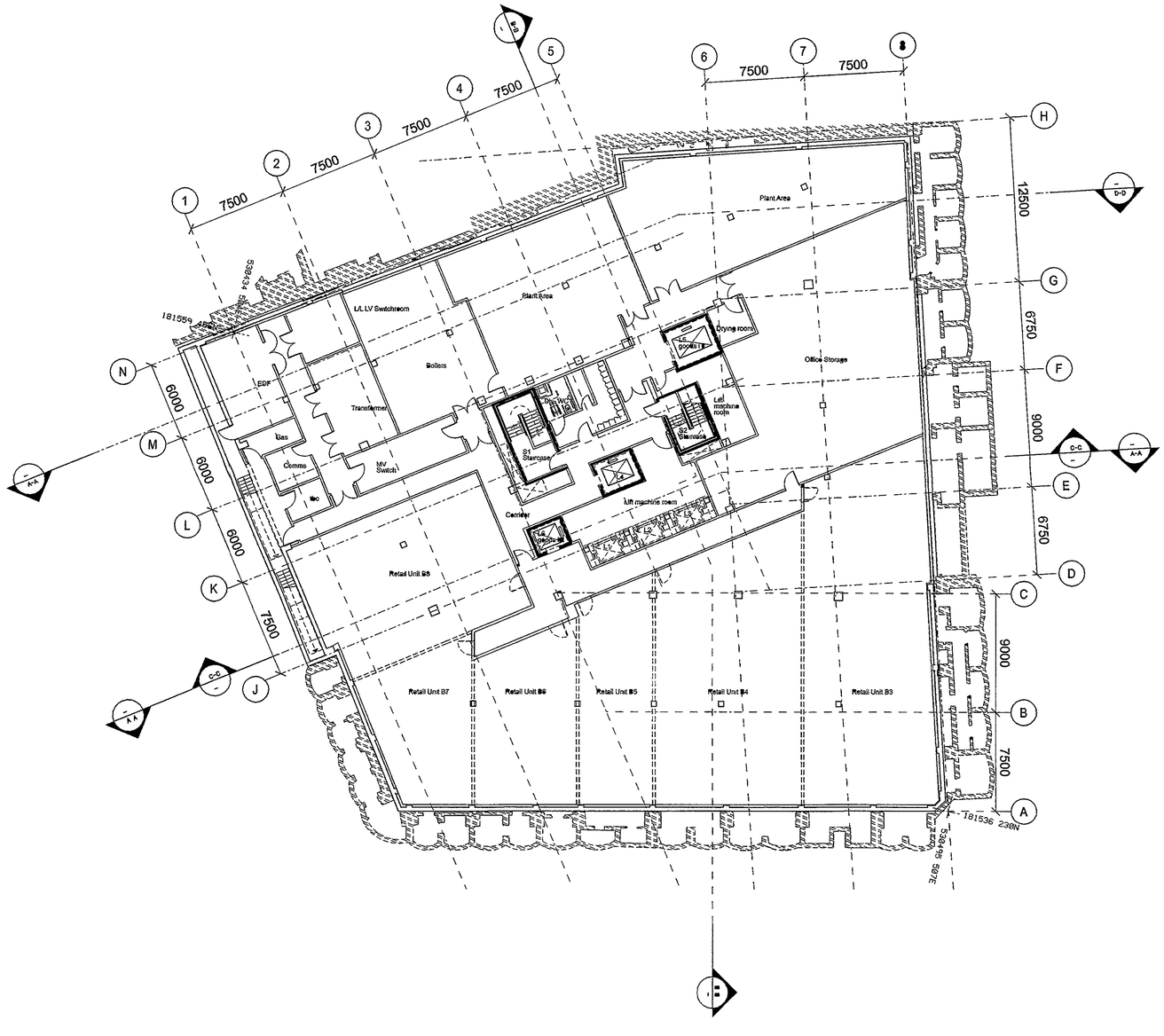

© COPYRIGHT

The copyright in this drawing is vested in Sheppard Robson and no licence or assignment of any kind has been or is granted to any third party whether by provision of copies or originals of the drawings or otherwise unless otherwise agreed in writing

A1

DO NOT SCALE FROM THIS DRAWING

The contractor shall check and verify all dimensions on site and report any discrepancies in writing to Sheppard Robson before proceeding with work.

FOR ELECTRONIC DATA ISSUE

Electronic data / drawings are issued as 'read only' and should not be interrogated for measurement. All dimensions and levels should be read only from these values stated in text, on the drawing

AREA MEASUREMENT

The areas are approximate and can only be verified by a detailed dimensional survey of the completed building. Any decisions to be made on the basis of these predictions whether as to project viability, pre-letting, lease agreements or the like, should include due allowance for the increases and decreases inherent in the design development and building processes. Figures relate to the likely areas of the building at the current state of the design and using the Gross External Area (GEA) / Gross Internal Area (GIA) / Net Internal Area (NIA) method of measurement from the Code of Measuring Practice, 5th Edition (RICS Code of Practice). All areas are subject to Town Planning and Conservation Area Consent, and detailed Rights to Light analysis

NOTES.

SET UP FROM DRAWING: 20_049.pll 18/05/06

REV	DATE	AMENDMENT
	26/06/06	ISSUED FOR PLANNING

KEY PLAN

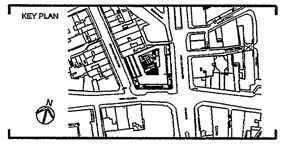

TITLE

125 High Holborn

London

LOGO

SHEPPARD ROBSON

ARCHITECTURE URBAN DESIGN PLANNING INTERIORS

LOCATION 77 PARKWAY CAMDEN TOWN LONDON NW1 7PU
PHONE +44 0 20 7504 1700 FAX +44 0 20 7504 1701
WEBSITE www.sheppardrobson.com E-MAIL sr.mail@sheppardrobson.com

DRAWING

General Arrangement Plan
Basement

SCALE @ A1	DATE	ORIGINATOR	CHECKED	AUTHORISED
1 200	18 05 2006	-		-

STATUS

PLANNING

DRAWING NO	REV
2047 - 20 - 200	-

Plotted 04/09/2006 Filename L:\Projects\2000_etc\2047\CAD\export\2005_09\060904_Planning Application\Additional Area\DGN\Proposed\20 200- dgn

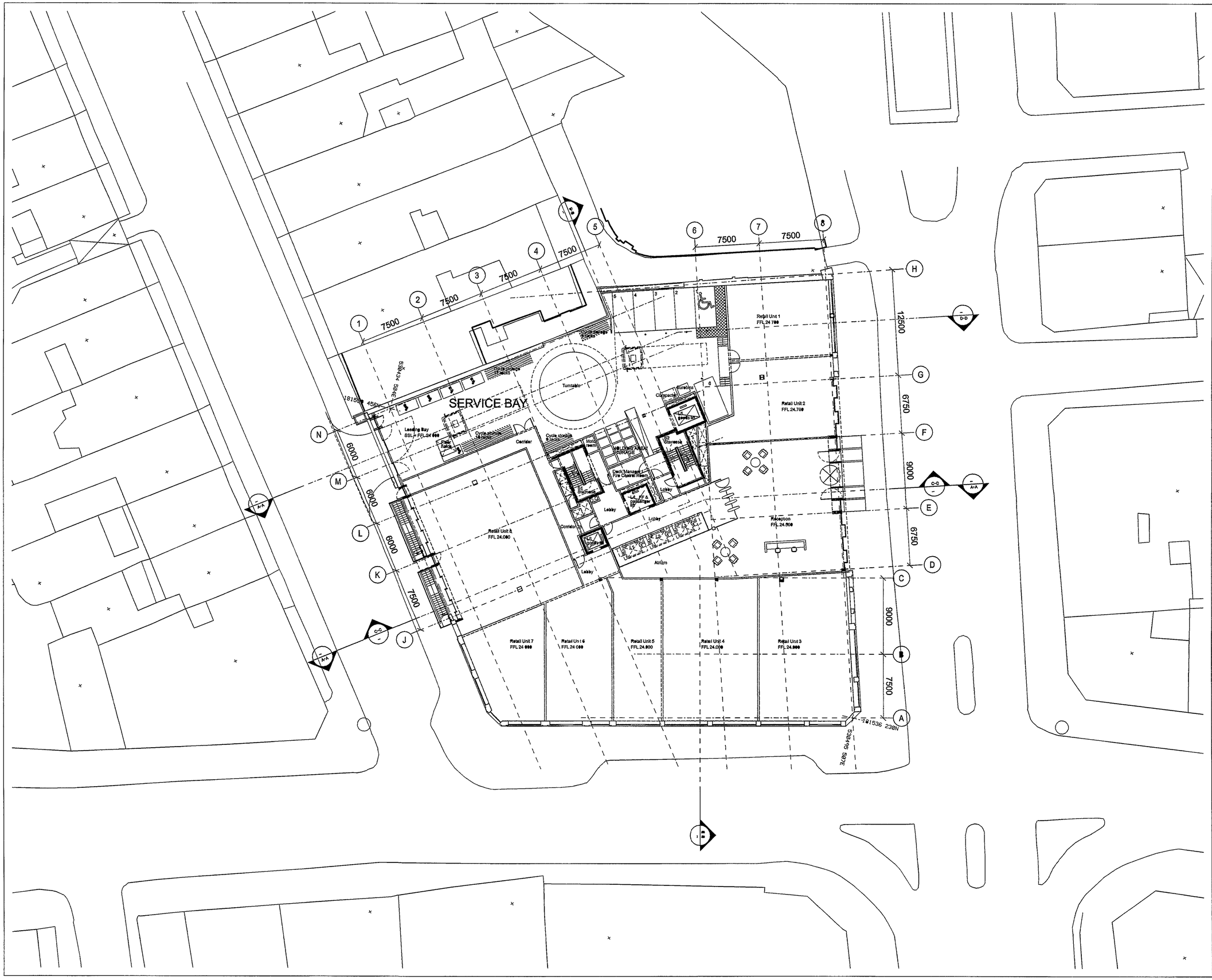
SERVICE BAY
Turntable
Retail Unit 1
FFL 24.700
Retail Unit 2
FFL 24.700
Reception
FFL 24.500
Atrium
Lobby
Retail Unit 8
FFL 24.080
Retail Unit 7
FFL 24.000
Retail Unit 6
FFL 24.000
Retail Unit 5
FFL 24.000
Retail Unit 4
FFL 24.000
Retail Unit 3
FFL 24.000
Leading Bay
SSL# FFL 24.000
Cycle storage
Cycle storage
Cycle storage

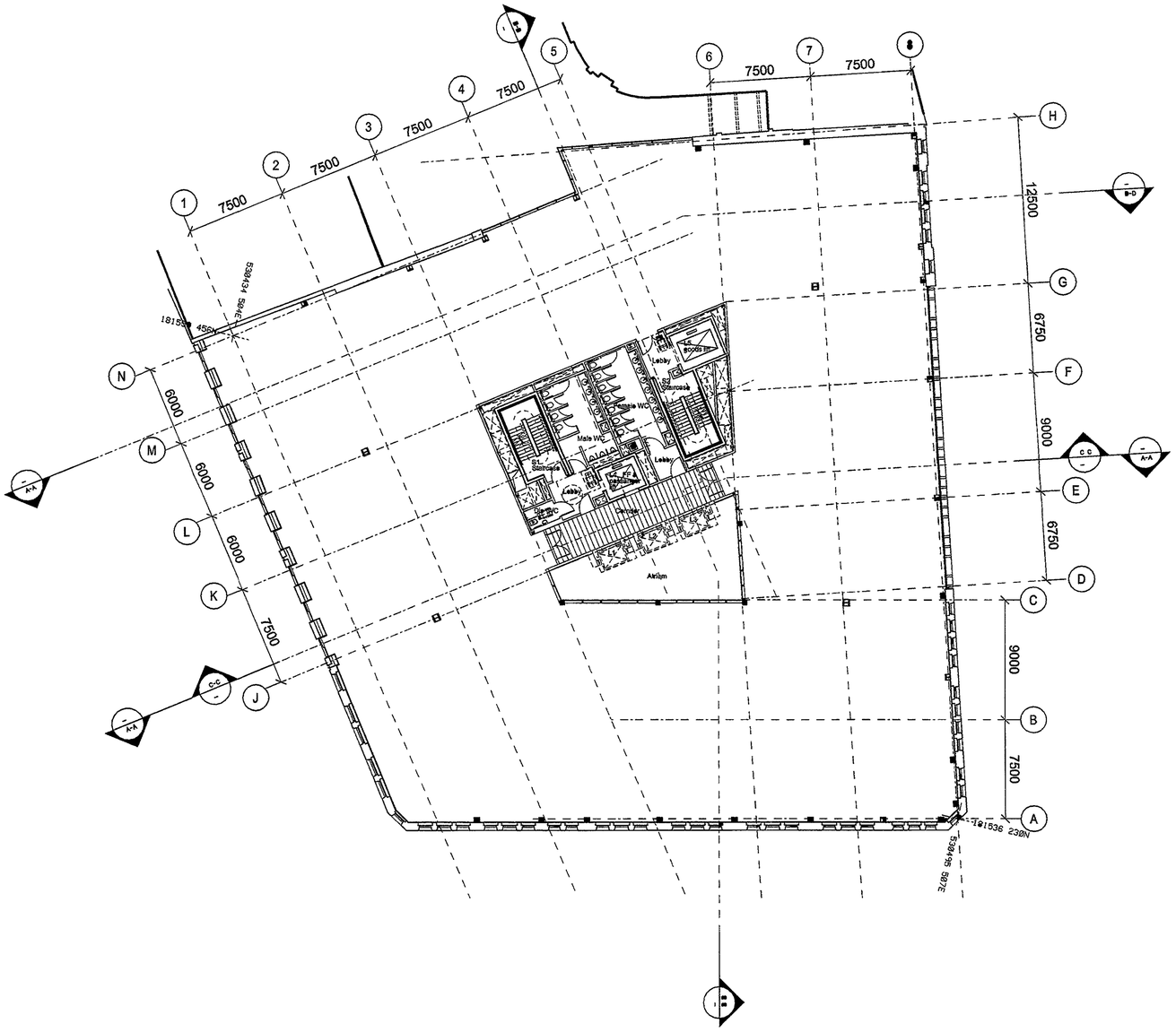

© COPYRIGHT

The copyright in this drawing is vested in Sheppard Robson and no licence or assignment of any kind has been or is granted to any third party whether by provision of copies or originals of the drawings or otherwise unless otherwise agreed in writing

DO NOT SCALE FROM THIS DRAWING

The contractor shall check and verify all dimensions on site and report any discrepancies in writing to Sheppard Robson before proceeding with work.

FOR ELECTRONIC DATA ISSUE

Electronic data / drawings are issued as 'read only' and should not be interrogated for measurement. All dimensions and levels should be read only from those values stated in text, on the drawing.

AREA MEASUREMENT

The areas are approximate and can only be verified by a detailed dimensional survey of the completed building. Any decisions to be made on the basis of these predictions, whether as to project viability, pre-letting, lease agreements or the like, should include due allowance for the increases and decreases inherent in the design development and building processes. Figures relate to the likely areas of the building at the current state of the design and using the Gross External Area (GEA) / Gross Internal Area (GIA) / Net Internal Area (NIA) method of measurement from the Code of Measuring Practice, 5th Edition (RICS Code of Practice). All areas are subject to Town Planning and Conservation Area Consent and detailed Rights to Light analysis.

NOTES:

SET UP FROM DRAWING 20_242.pl 18/05/06

A1

REV	DATE	AMENDMENT
A	28/06/06	ISSUED FOR PLANNING
	06/06/06	ISSUED FOR COMMENT

KEY PLAN

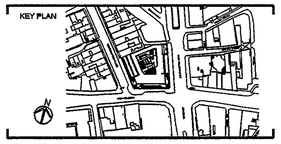

TITLE

125 High Holborn

London

LOGO

SHEPPARD ROBSON

ARCHITECTURE URBAN DESIGN PLANNING INTERIORS

LOCATION 77 PARKWAY CAMDEN TOWN LONDON NW1 7PU
PHONE +44 0 20 7584 1700 FAX +44 0 20 7584 1701
WEBSITE www.sheppardrobson.com E-MAIL sr.mail@sheppardrobson.com

DRAWING

General Arrangement Plan
Level 1

SCALE @ A1	DATE	ORIGINATOR	CHECKED	AUTHORISED
1 : 200	18 05 2006	-		-

STATUS

PLANNING

DRAWING NO	REV
2047 - 20 - 202	A

Plotted 04/09/2006

Filename L:\Projects\2000_etc\2047\CAD\export\2006_09\060904_Planning Application\Additional Areas\DGN\Proposed\20 202 A.dgn

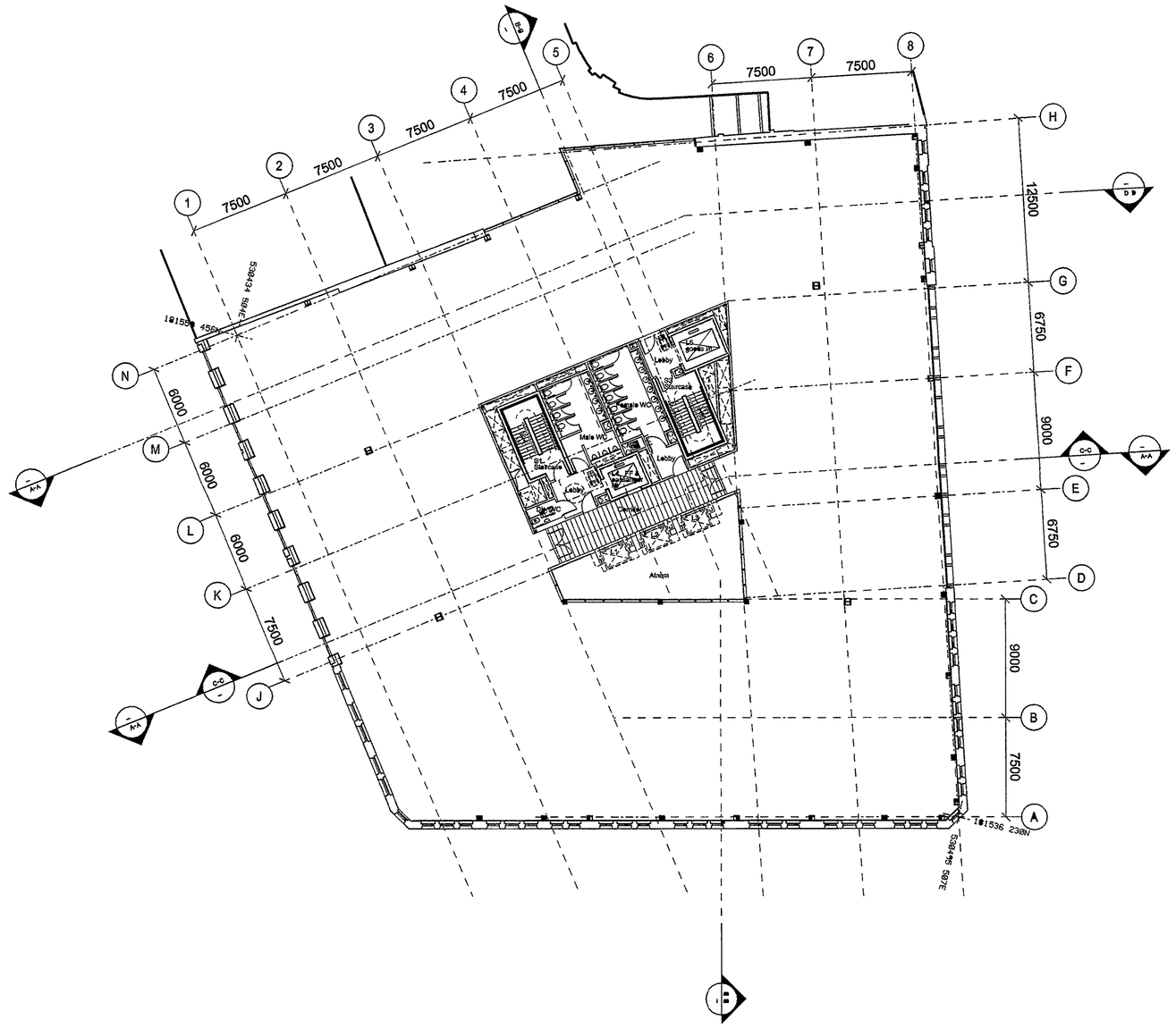

© COPYRIGHT

The copyright in this drawing is vested in Sheppard Robson and no licence or assignment of any kind has been or is, granted to any third party whether by provision of copies or originals of the drawings or otherwise unless otherwise agreed in writing.

DO NOT SCALE FROM THIS DRAWING

The contractor shall check and verify all dimensions on site and report any discrepancies in writing to Sheppard Robson before proceeding with work.

FOR ELECTRONIC DATA ISSUE

Electronic data / drawings are issued as 'read only' and should not be interrogated for measurement. All dimensions and levels should be read only from those values stated in text, on the drawing

AREA MEASUREMENT

The areas are approximate and can only be verified by a detailed dimensional survey of the completed building. Any decisions to be made on the basis of these predictions whether as to project viability, pre-letting lease agreements or the like, should include due allowance for the increases and decreases inherent in the design development and building processes. Figures relate to the likely areas of the building at the current state of the design and using the Gross External Area (GEA) / Gross Internal Area (GIA) / Net Internal Area (NIA) method of measurement from the Code of Measuring Practice 5th Edition (RICS Code of Practice). All areas are subject to Town Planning and Conservation Area Consent, and detailed Rights to Light analysis.

NOTES.

SET UP FROM DRAWING 08_243.pln 18/05/06

REV	DATE	AMENDMENT
A	25/08/06	ISSUED FOR PLANNING
	05/08/06	ISSUED FOR COMMENT

KEY PLAN

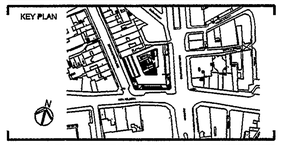

TITLE

125 High Holborn

London

LOGO

SHEPPARD ROBSON

ARCHITECTURE URBAN DESIGN PLANNING INTERIORS

LOCATION 77 PARKWAY CAMDEN TOWN LONDON NW1 7PU
PHONE +44 0 20 7584 1780 FAX +44 0 20 7584 1761
WEBSITE www.sheppardrobson.com E-MAIL sr mail@sheppardrobson.com

DRAWING

General Arrangement Plan
Level 2

SCALE @ A1	DATE	ORIGINATOR	CHECKED	AUTHORISED
1 200	18 05.2006			-

STATUS

PLANNING

DRAWING No.	REV
2047 - 20 - 203	A

Filename L:\Projects\2000_etc\2047\CAD\export\2006_08\060804_Planning Application\Additional Area\DGN\Proposed\20-203 A.dgn

Plotted 04/08/2006

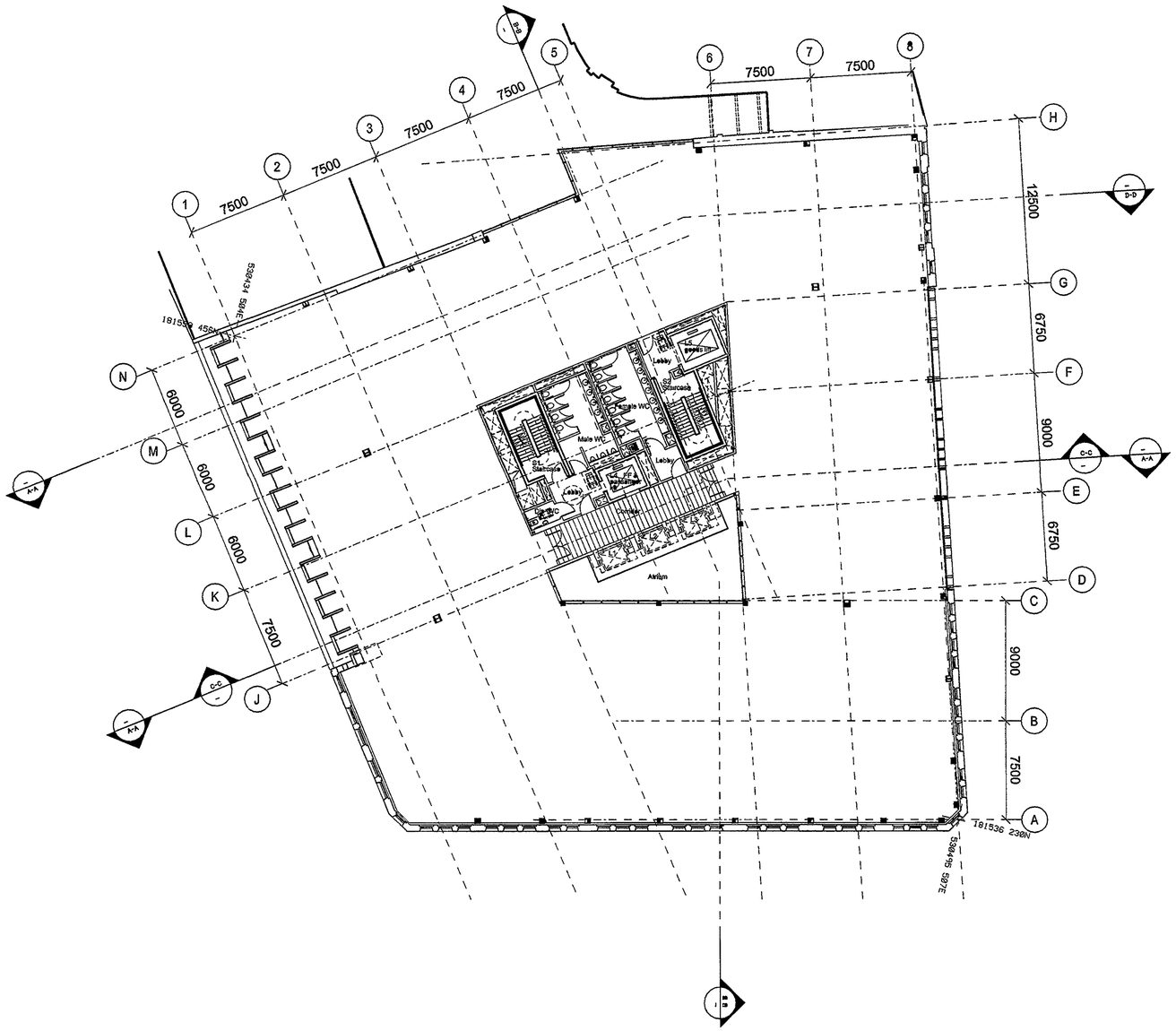
7500
7500
7500
7500
7500
7500
7500
12500
6750
9000
6750
9000
7500
6000
6000
6000
7500
Lobby
Male WC
Female WC
Lobby
Corridor
Atrium
Lobby
Lobby
Lobby

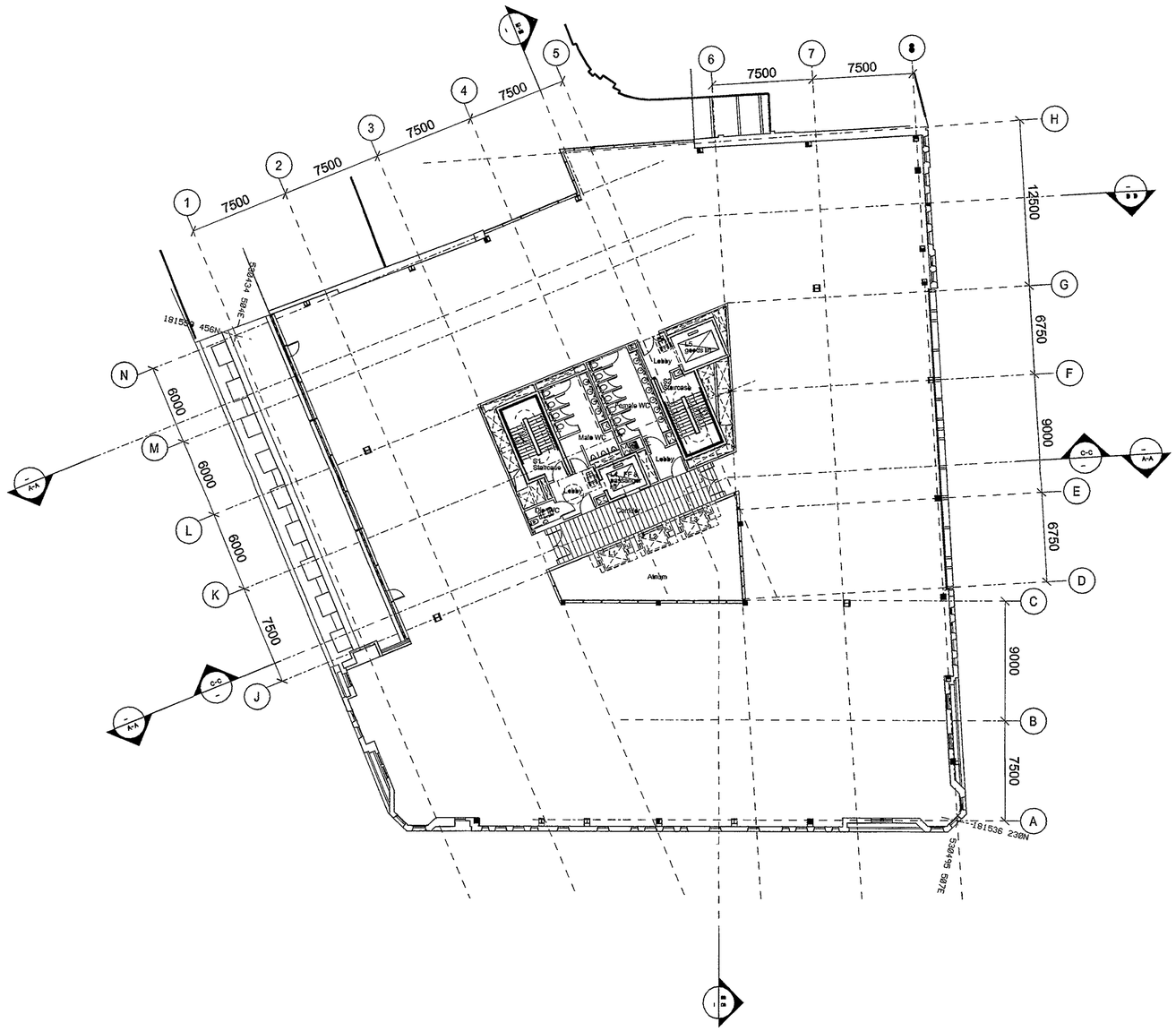
1
2
3
4
5
6
7
8
7500
7500
7500
7500
7500
7500
7500
H
G
F
E
D
C
B
A
12500
6750
9000
6750
9000
7500
N
M
L
K
J
6000
6000
6000
7500
A-A
B-B
C-C
Lobby
Male WC
Female WC
Lift
Staircase
Lift
Staircase
Lobby
Lobby
Lobby
Lift
Lift
Lift

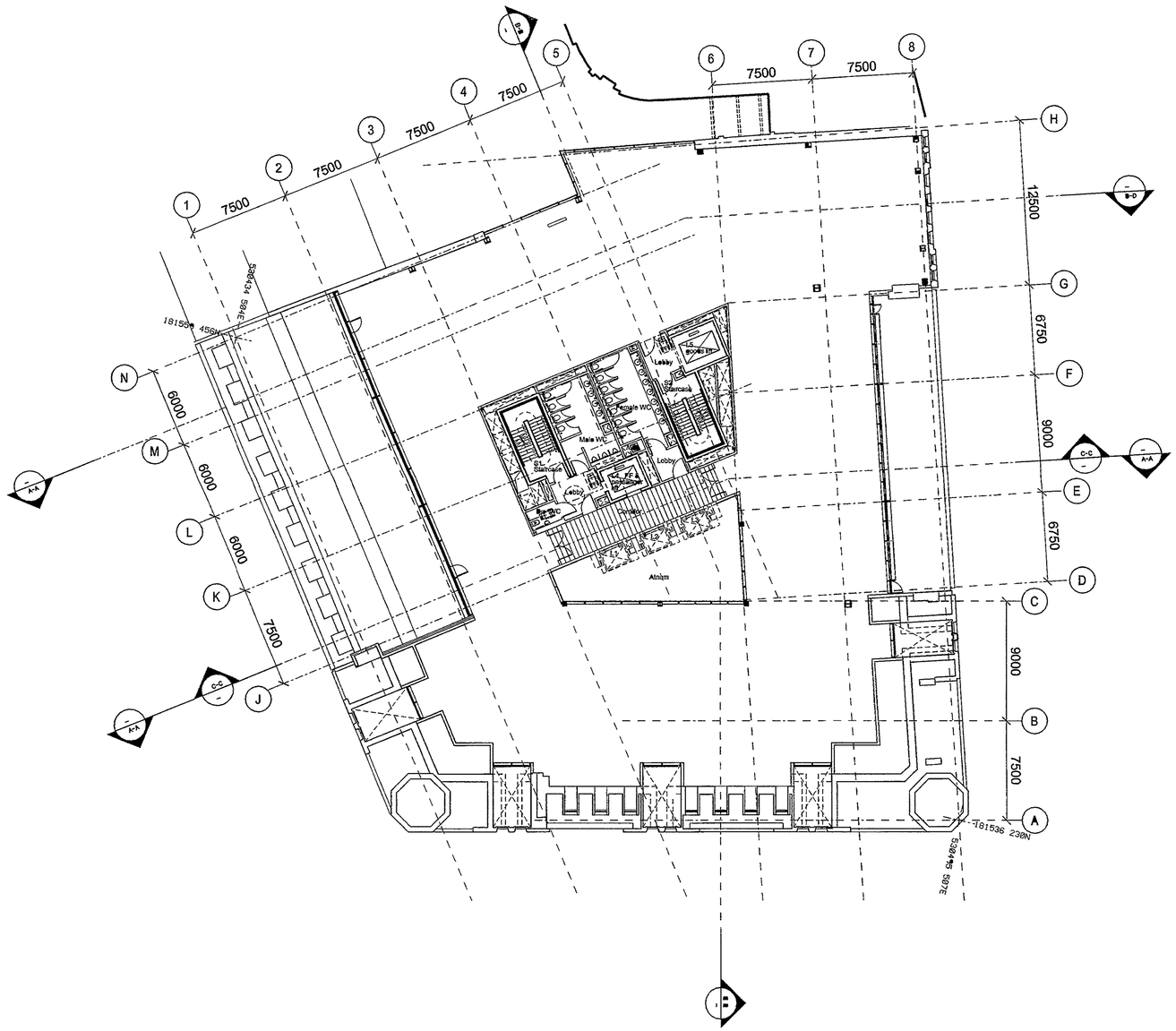
1
2
3
4
5
6
7
8
7500
7500
7500
7500
7500
7500
H
G
F
E
D
C
B
A
12500
6750
9000
6750
9000
7500
N
M
L
K
J
6000
6000
6000
7500
Male WC
Female WC
Male WC
Lobby
Lobby
Lobby
Corridor
Atrium
Lift
Lift
Lift

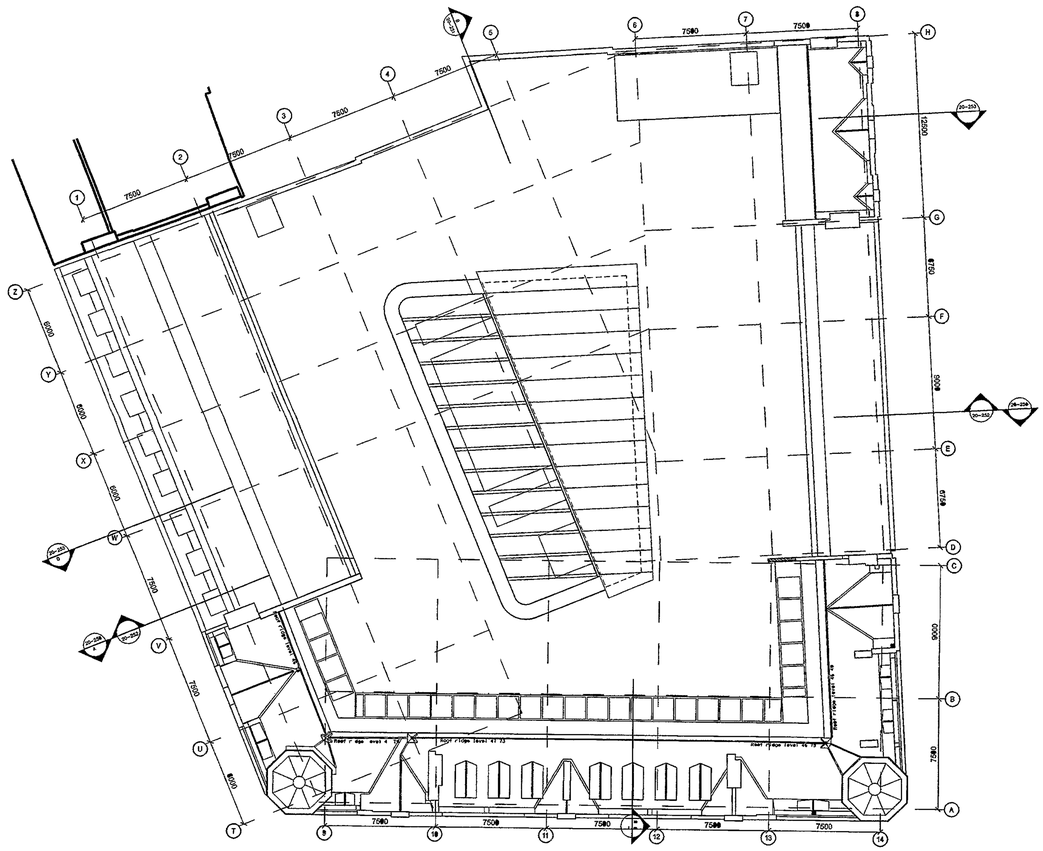

© COPYRIGHT

The copyright in this drawing is vested in Sheppard Robson and no licence or assignment of any kind has been, or is granted to any third party whether by provision of copies or originals of the drawings or otherwise unless otherwise agreed in writing

DO NOT SCALE FROM THIS DRAWING

The contractor shall check and verify all dimensions on site and report any discrepancies in writing to Sheppard Robson before proceeding with work.

FOR ELECTRONIC DATA ISSUE

Electronic data / drawings are issued as "read only" and should not be interrogated for measurement. All dimensions and levels should be read only from those values stated in text, on the drawing

AREA MEASUREMENT

The areas are approximate and can only be verified by a detailed dimensional survey of the completed building. Any decisions to be made on the basis of these predictions, whether as to project viability, pre-letting, lease agreements or the like, should include due allowance for the inaccuracies and exclusions inherent in the design, development and building processes. Figures relate to the lettable areas of the building in accordance of the design and using the Gross External Area (GEA) / Gross Internal Area (GIA) / Net Internal Area (NIA) method of measurement from the Code of Measuring Practice 5th Edition (RICS Code of Practice). All areas are subject to Town Planning and Conservation Area Consent and detailed Rights to Light analysis

NOTES.

SET UP FROM DRAWING 29_247.pl1 16/05/06

REV	DATE	AMENDMENT
A	29/06/06	Issued for planning
	08/06/06	Issued for comment.

KEY PLAN

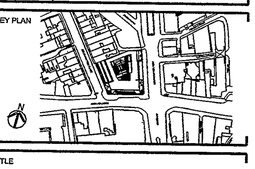

TITLE

125 High Holborn

London

LOGO

SHEPPARD ROBSON

ARCHITECTURE URBAN DESIGN PLANNING INTERIORS

LOCATION 77 PARKWAY CAMDEN TOWN LONDON NW1 7PU
PHONE +44 0 20 7584 1780 FAX +44 0 20 7584 1781
WEBSITE www.sheppardrobson.com E-MAIL sr.mail@sheppardrobson.com

DRAWING

General Arrangement Plan
Roof

SCALE @ A1	DATE	ORIGINATOR	CHECKED	AUTHORISED
1 200	18 05 2006			-

STATUS

PLANNING

DRAWING NO	REV
2047 - 20 - 207	A

Plotted 04/09/2006 Filename L:\Projects\2000_etc\2047\CAD\export\2006_09\060904_Planning Application\Additional Area\DGN\Proposal\20-207 A.dgn

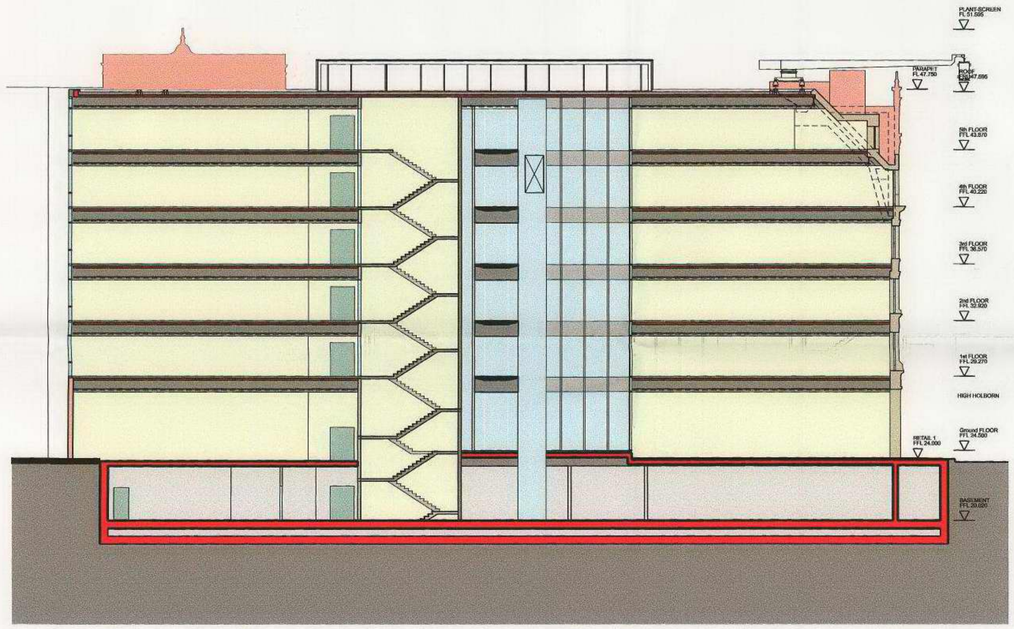

A1

© COPYRIGHT

The copyright in this drawing is vested in Sheppard Robson and no licence or assignment of any kind has been, or is, granted to any third party whether by provision of copies or originals of the drawings or otherwise unless otherwise agreed in writing.

DO NOT SCALE FROM THIS DRAWING

The contractor shall check and verify all dimensions on site and report any discrepancies in writing to Sheppard Robson before proceeding with work.

FOR ELECTRONIC DATA ISSUE

Electronic data / drawings are issued as "read only" and should not be interrogated for measurement. All dimensions and levels should be read, only from those values stated in text, on the drawing.

AREA MEASUREMENT

The areas are approximate and can only be verified by a detailed dimensional survey of the completed building. Any decisions to be made on the basis of these predictions, whether as to project viability, pre-letting, lease agreements or the like, should include due allowance for the increases and decreases inherent in the design development and building processes. Figures relate to the likely areas of the building at the current state of the design and using the Gross External Area (GEA) / Gross Internal Area (GIA) / Nett Internal Area (NIA) method of measurement from the Code of Measuring Practice, 5th Edition (RICS Code of Practice). All areas are subject to Town Planning and Conservation Area Consent, and detailed Rights to Light analysis.

NOTES:

REV	DATE	AMENDMENT
C	09/08/06	ISSUED FOR PLANNING
B	--/--/--	PLANNING ISSUE Atrium roof revised
A	--/--/--	consultants issue

KEY PLAN

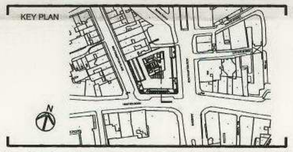

TITLE

125 High Holborn

London

LOGO

SHEPPARD ROBSON

ARCHITECTURE URBAN DESIGN PLANNING INTERIORS

LOCATION 77 PARKWAY . CAMDEN TOWN . LONDON . NW1 7PU
PHONE +44 0 20 7504 1700 FAX +44 0 20 7504 1701
WEBSITE www.sheppardrobson.com E-MAIL sr.mail@sheppardrobson.com

DRAWING

Section B-B
(For Illustrative Purposes)

SCALE @ A1	DATE	ORIGINATOR	CHECKED	AUTHORISED
1: 200	-- .-- .--	SR	JA	-

STATUS

PLANNING

DRAWING NO.	REV
2047 - 20 - 251	C

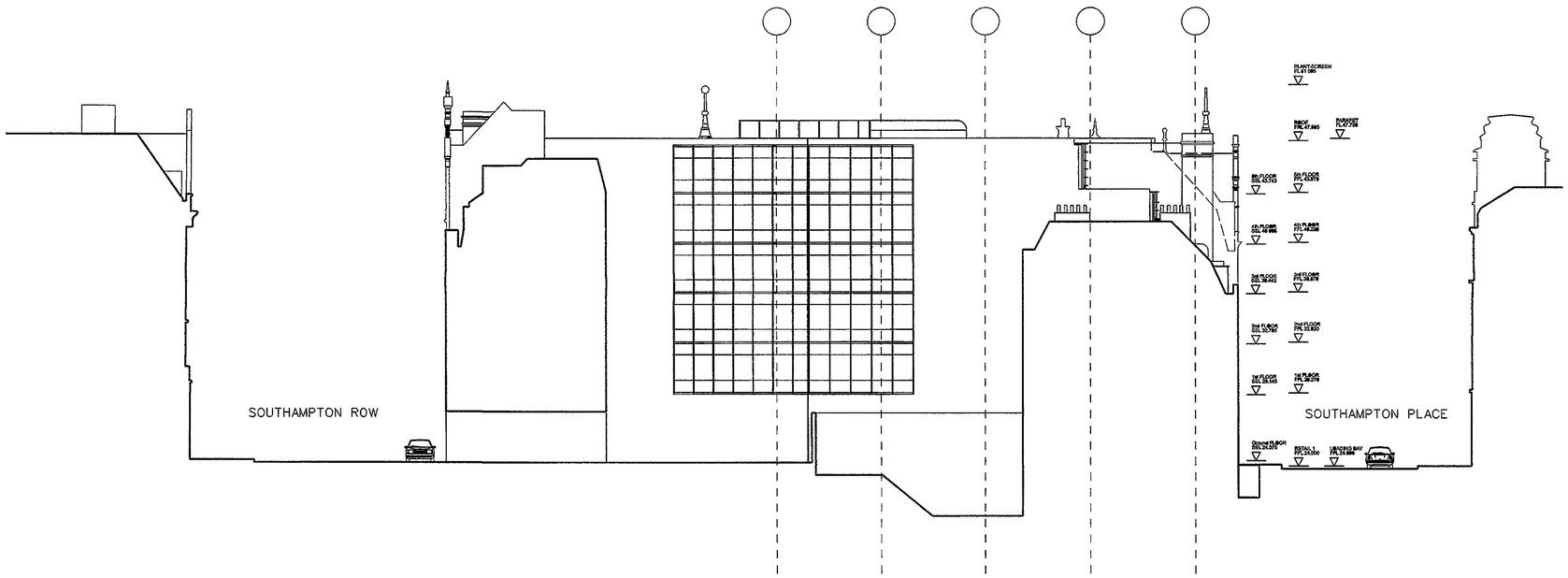

© COPYRIGHT

The copyright in this drawing is vested in Sheppard Robson and no licence or assignment of any kind has been or is granted to any third party whether by provision of copies or originals of the drawings or otherwise unless otherwise agreed in writing

A1

DO NOT SCALE FROM THIS DRAWING

The contractor shall check and verify all dimensions on site and report any discrepancies in writing to Sheppard Robson before proceeding with work.

FOR ELECTRONIC DATA ISSUE

Electronic data / drawings are issued as "read only" and should not be interrogated for measurement. All dimensions and levels should be read only from these values stated in text, on the drawing.

AREA MEASUREMENT

The areas are approximate and can only be verified by a detailed dimensional survey of the completed building. Any decisions to be made on the basis of these predictions whether as to project viability, pre-letting, lease agreements or the like, should include due allowance for the increases and decreases inherent in the design development and building processes. Figures relate to the likely areas of the building at the current state of the design and using the Gross External Area (GEA) / Gross Internal Area (GIA) / Net Internal Area (NIA) method of measurement from the Code of Measuring Practice, 5th Edition (RICS Code of Practice) All areas are subject to Town Planning and Conservation Area Consent, and detailed Rights to Light analysis.

NOTES.

REV	DATE	AMENDMENT
B	29/08/06	ISSUED FOR PLANNING
A	-/-/-	Issued for Comment

KEY PLAN

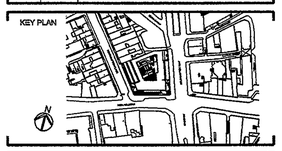

TITLE

125 High Holborn

London

LOGO

SHEPPARD ROBSON

ARCHITECTURE URBAN DESIGN PLANNING INTERIORS

LOCATION 77 PARKWAY CAMDEN TOWN LONDON NW1 7PU
PHONE +44 0 20 7504 1700 FAX +44 0 20 7504 1701
WEBSITE www.sheppardrobson.com EMAIL sr.mail@sheppardrobson.com

DRAWING

North Elevation

SCALE @ A1	DATE	ORIGINATOR	CHECKED	AUTHORISED
1 200	- - -	SR	JA	

STATUS

PLANNING

DRAWING NO	REV
2047 - 20 - 263	B

Filename L:\Projects\2000_etc\2047\CAD\layout\2006_09\060904_Planning Application\Additional Area\DGN\Proposed\20 263-B.dgn

Plotted 04/09/2006

SHEPPARD ROBSON
ARCHITECTURE URBAN DESIGN PLANNING INTERIORS

LOCATION 77 PARKWAY . CAMDEN TOWN
LONDON . NW1 7PU
PHONE +44 0 20 7504 1700
FAX +44 0 20 7504 1701
WEBSITE www.sheppardrobson.com
E-MAIL sr.mail@sheppardrobson.com

125 High Holborn

London

DRAWING NO. 2047 -SK-060 REV. A

DRAWING TYPICAL FLOOR PLAN -
Current & Proposed Schemes (For Illustrative Purposes)

AMENDMENTS - 24.08.2006 Issued for comment
A 25.08.2006 Issued for Planning

SCALE @ A3 1:400
DATE 24.08.2006
ORIGINATED BY DP
CHECKED BY EJ
AUTHORISED BY BK
STATUS PLANNING

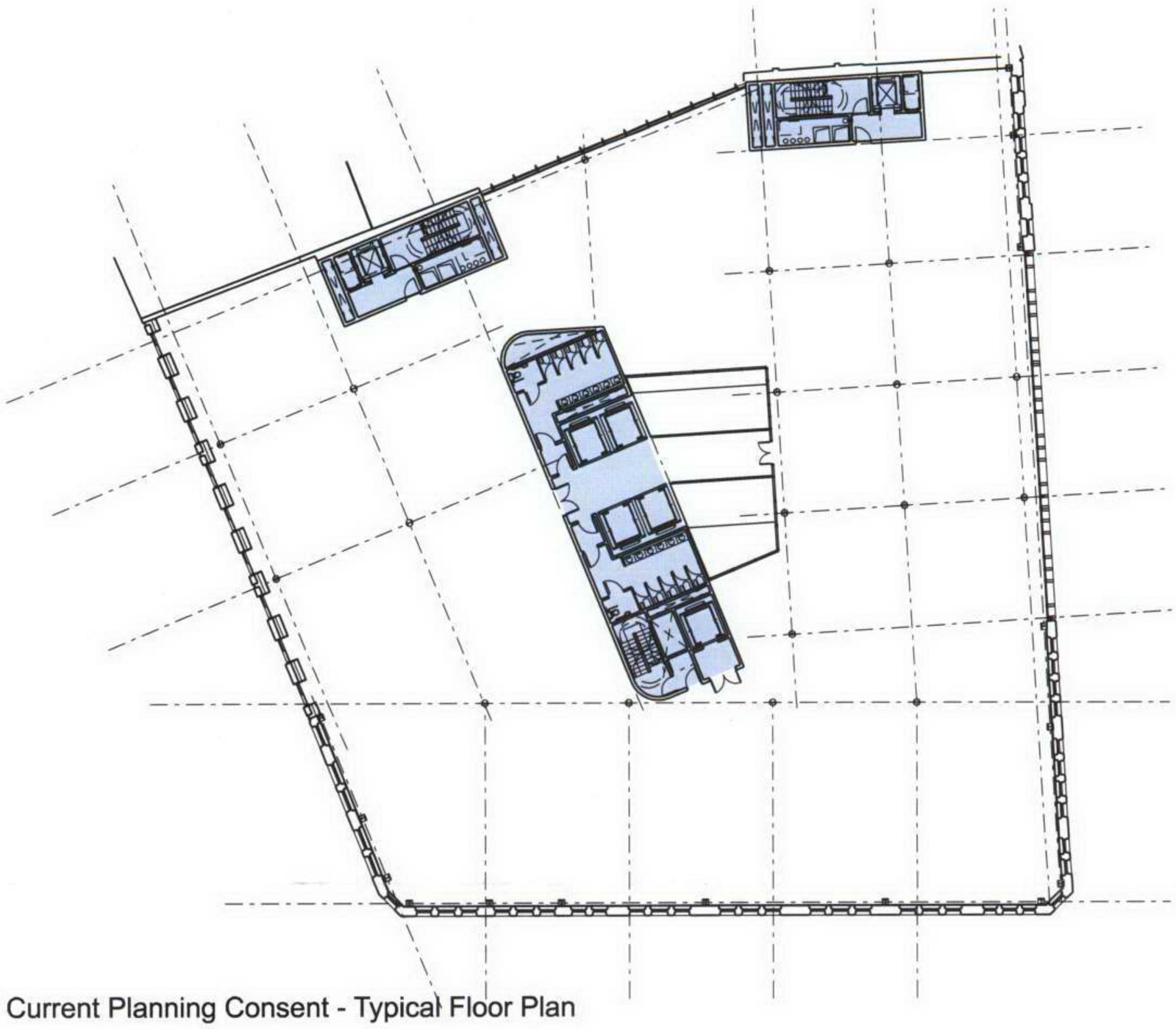

Current Planning Consent - Typical Floor Plan

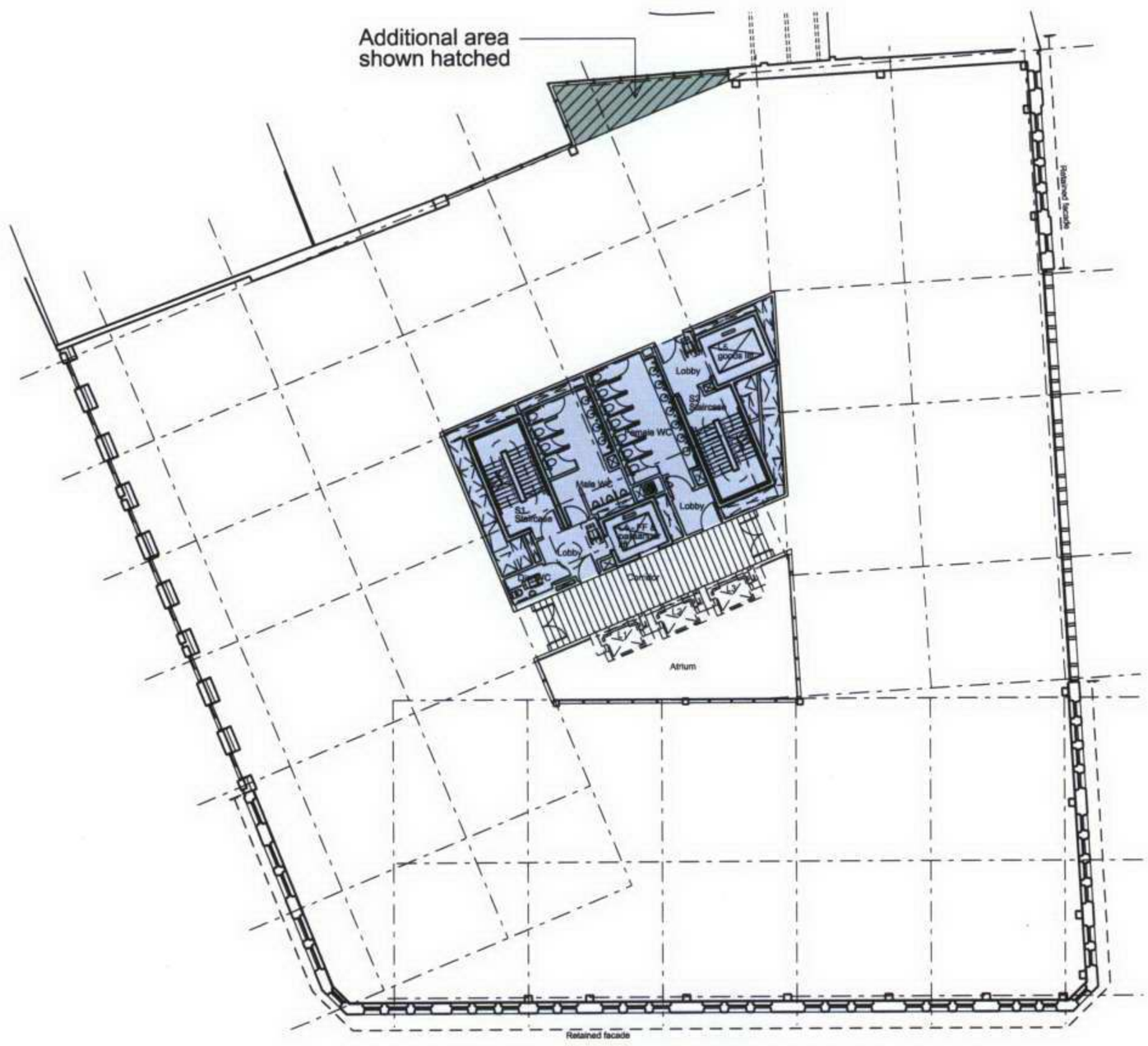

Proposed Scheme - Typical Floor Plan

© COPYRIGHT
The copyright in this drawing is vested in Sheppard Robson and no licence or assignment of any kind has been, or is, granted to any third party whether by provision of copies or originals of the drawings or otherwise unless otherwise agreed in writing.

DO NOT SCALE FROM THIS DRAWING
The contractor shall check and verify all dimensions on site and report any discrepancies in writing to Sheppard Robson before proceeding with work.

FOR ELECTRONIC DATA ISSUE
Electronic data / drawings are issued as "read only" and should not be interrogated for measurement. All dimensions and levels should be read, only from those values stated in text, on the drawing.

Plotted 04/09/2006
Filename I:\Projects\2000 etc\2047\CAD\export\2006 09\060904 Planning Application\Additional Area\DGN\Proposed\SK-060-A.dgn