Existing Photo
View from South
1
SK/04

Existing Photo
View from North
2
SK/04

Revisions:

earlearchitects
121 essex road
london n1 2sn

t: 020 7226 2231
f: 020 7226 4288

info@earlearchitects.com
www.earlearchitects.com

Project: 87 MARCHMONT STREET

Client: PAUL CLEMENT

Drawing Title: EXISTING EXTERNAL PHOTOGRAPHS

Scale:

Date: JANUARY 2007

Drawing Status:

FOR INFORMATION ☒
FOR TENDER ☐
FOR CONSTRUCTION ☐

Drawing no:

DWG 060/SK04 revision: ☐

information based on preliminary measured survey. earle architects cannot accept responsibility for the accuracy of this information.

this drawing should be read in conjuction with all relevant drawings, specifications and other documents provided by the architect and engineers

Proposed photomontage 1 SK/20
View from South

Proposed photomontage 2 SK/20
View from North

Revisions:

earlearchitects
121 essex road
london n1 3sn

t: 020 7226 2231
f: 020 7226 4288

info@earlearchitects.com
www.earlearchitects.com

Project: 87 MARCHMONT STREET

Client: PAUL CLEMENT

Drawing Title: PROPOSED PHOTOMONTAGE

Scale:

Date: JANUARY 2007

Drawing Status:

- FOR INFORMATION ☒
- FOR TENDER ☐
- FOR CONSTRUCTION ☐

Drawing no: DWG 060/SK20 revision: ☐

information based on preliminary measured survey, earle architects cannot accept responsibility for the accuracy of this information.

this drawing should be read in conjuction with all relevant drawings, specifications and other documents provided by the architect and engineers

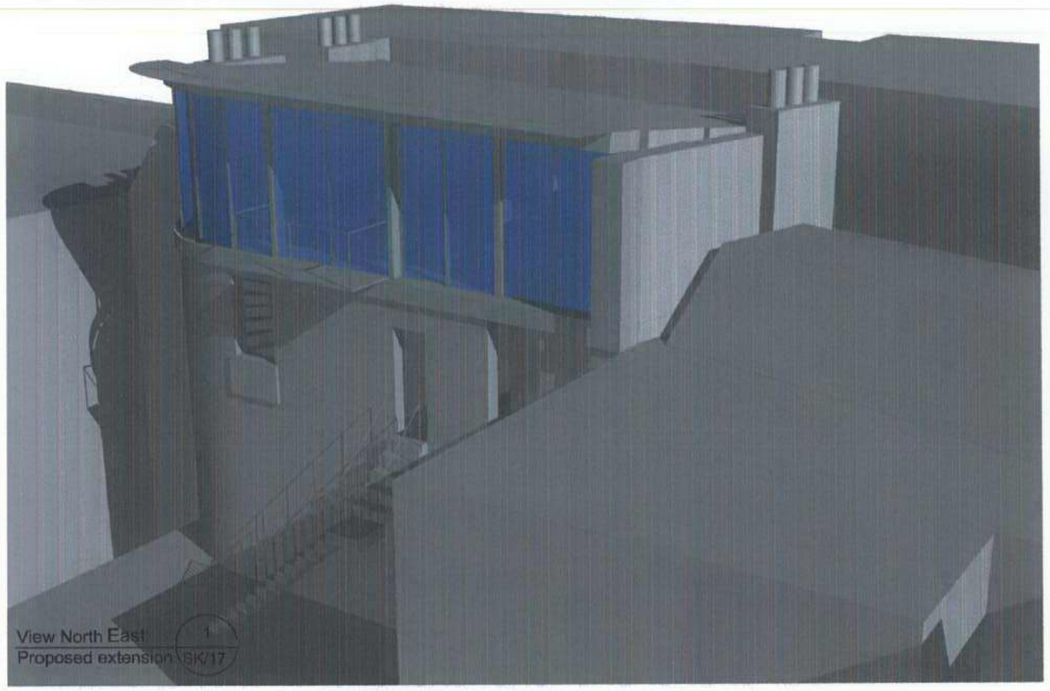

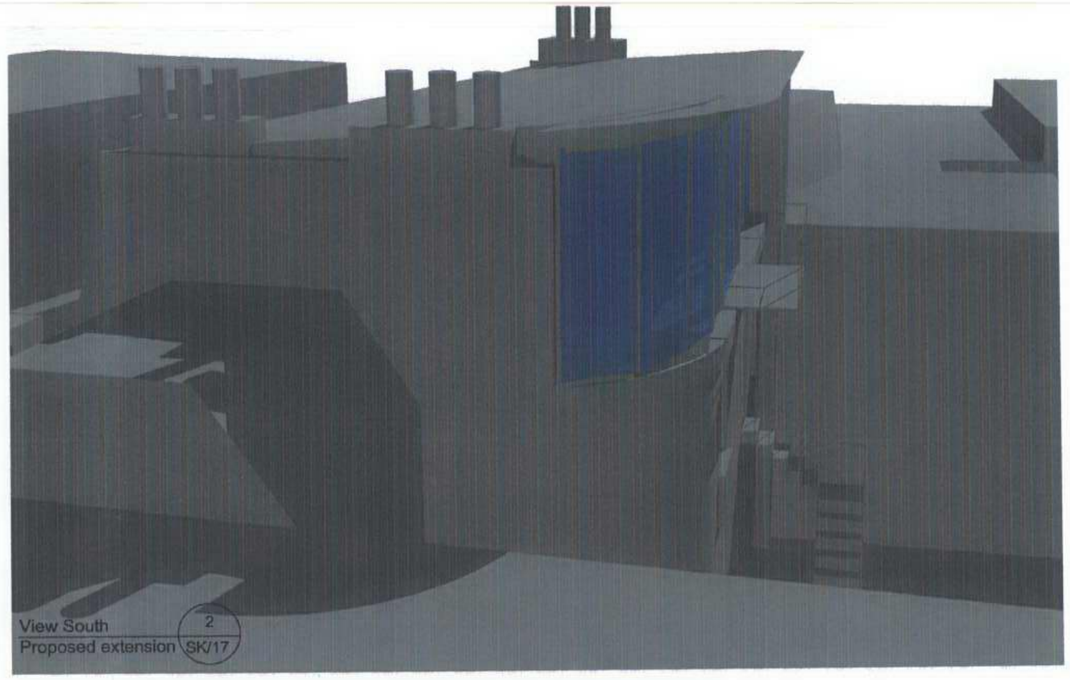

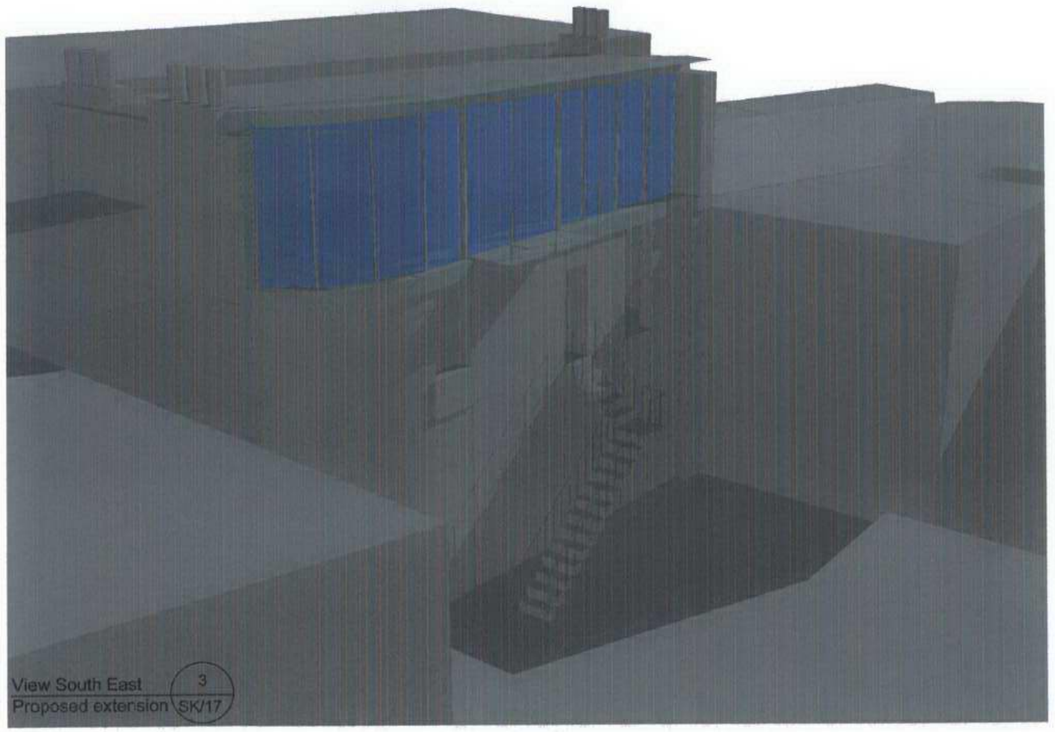

Revisions:

earlearchitects
121 essex road
london n1 2an

t: 020 7226 2231
f: 020 7226 4288

info@earlearchitects.com
www.earlearchitects.com

Project: 87 MARCHMONT STREET

Client: PAUL CLEMENT

Drawing Title: PROPOSED ELEVATIONS

Scale:

Date: JANUARY 2007

Drawing Status:

FOR INFORMATION ☒
FOR TENDER ☐
FOR CONSTRUCTION ☐

Drawing no:

DWG 060/SK17 revision ☐

information based on preliminary measured survey. earle architects cannot accept responsibility for the accuracy of this information.

this drawing should be read in conjuction with all relevant drawings, specifications and other documents provided by the structural and engineers

Notes:

1. All dimensions and levels to be checked on site. Any discrepancies to be reported to architect before work commences.

2. Do not scale this drawing. Figured dimensions only to be taken.

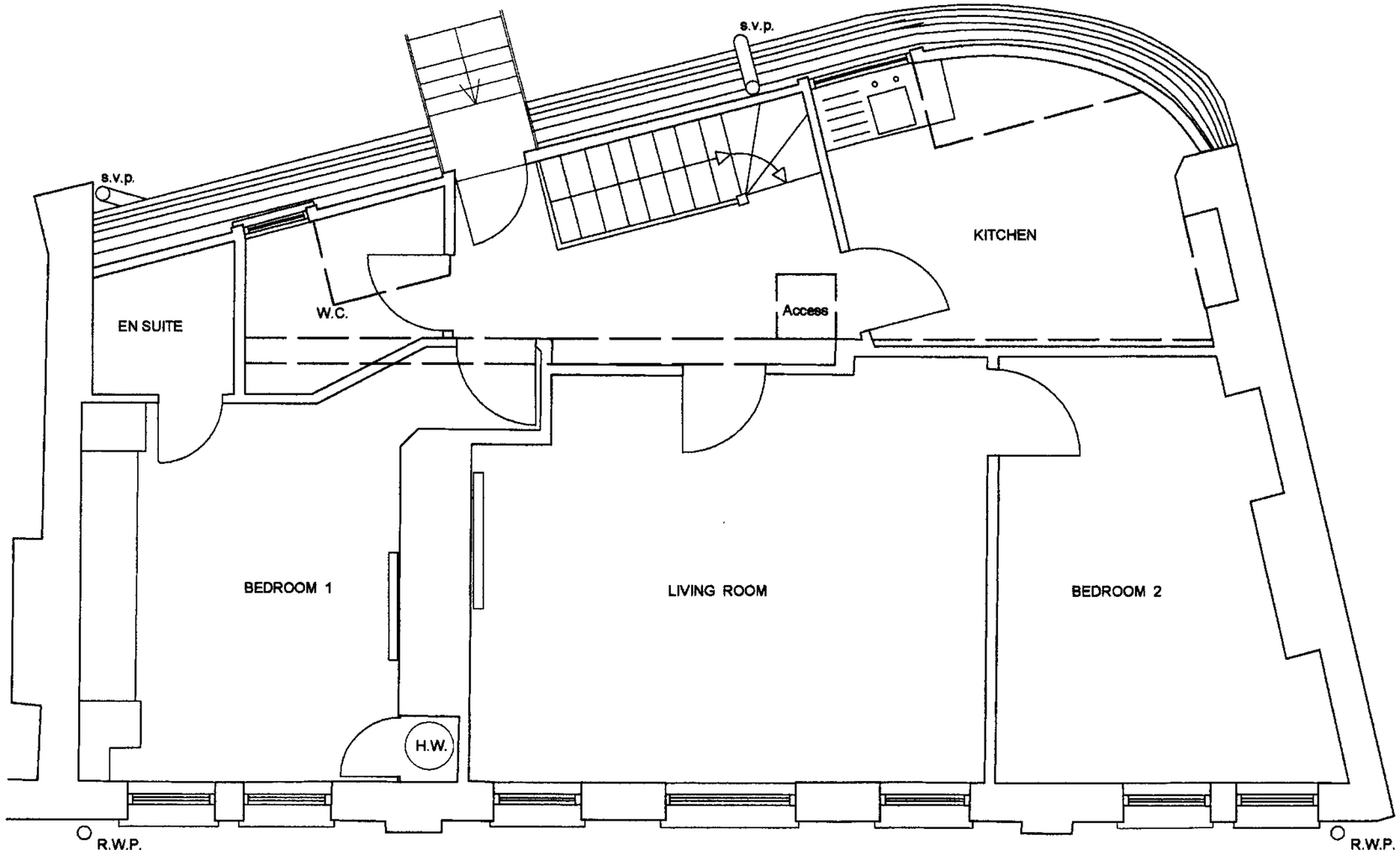

SCALE 1:50

EXISTING THIRD FLOOR PLAN (1 / SK/05)

Revisions:

earlearchitects
121 essex road
london n1 2sn

t: 020 7226 2231
f: 020 7226 4268

info@earlearchitects.com
www.earlearchitects.com

Project: 87 Marchmont Street

Client: PAUL CLEMENT

Drawing Title: THIRD FLOOR PLAN

Scale: 1:50 @ A3

Date: JANUARY 2007

Drawing Status:

- FOR INFORMATION ☒
- FOR TENDER ☐
- FOR CONSTRUCTION ☐

Drawing no:

DWG 060/SK 05 revision: ☐

Information based on preliminary measured survey. earle architects cannot accept responsibility for the accuracy of this information.

this drawing should be read in conjuction with all relevant drawings, specifications and other documents provided by the architect and engineers

Notes:

1. All dimensions and levels to be checked on site. Any discrepancies to be reported to architect before work commences.

2. Do not scale this drawing. Figured dimensions only to be taken.

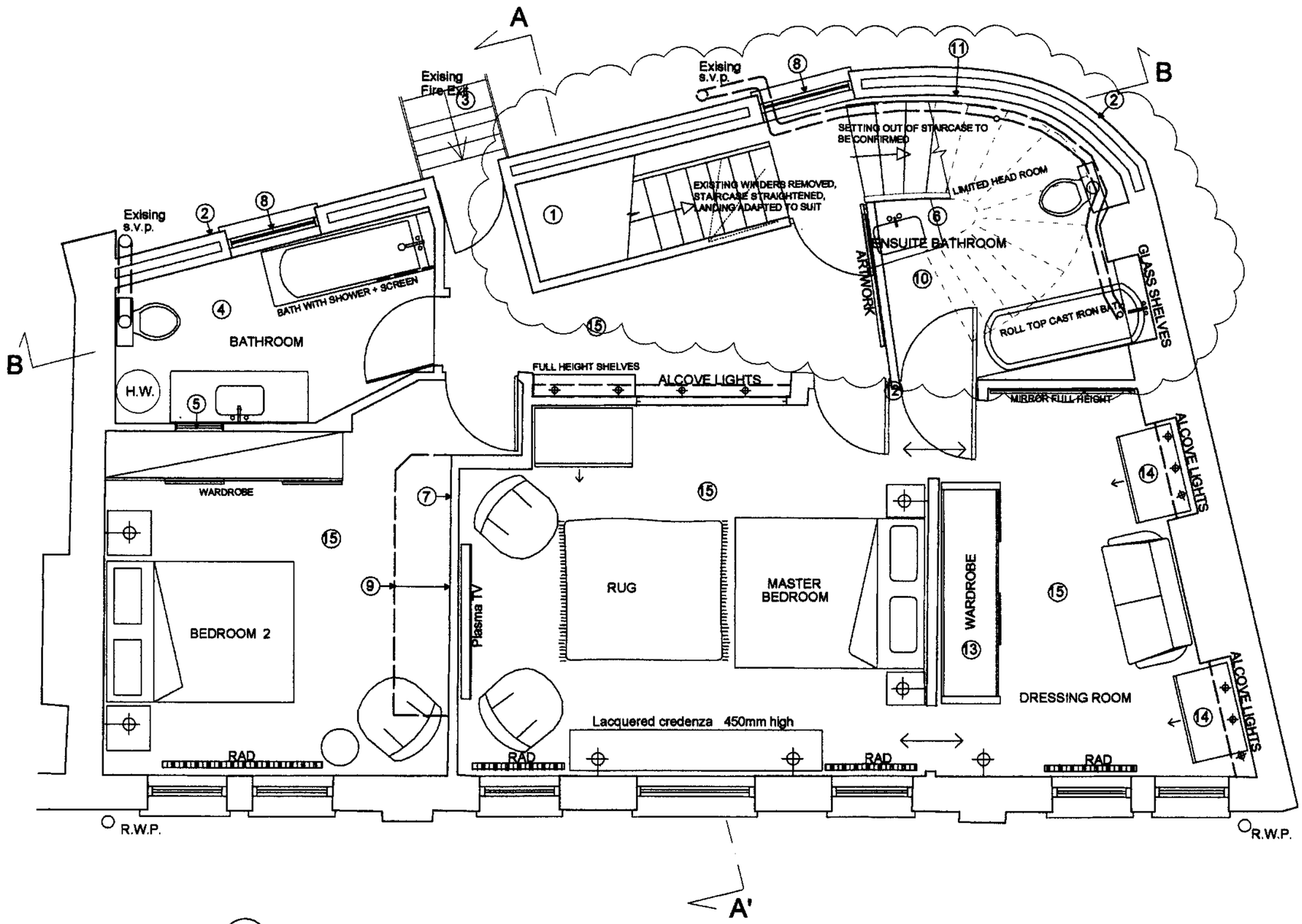

SCALE 1:50

PROPOSED THIRD FLOOR PLAN (1 / SK/06)

KEY:

1. New timber staircase to new 4th floor extension.
2. Existing rear wall to be build-up. new cavity wall with 50mm insulation. Brickwork to match existing.
3. Existing fire escape stair retained.
4. Existing en suite & bathroom removed, new bathroom to be installed.
5. Existing door frame & architrave removed. Allow for stud & plasterboard infill.
6. New en suite bathroom with roll top cast iron bath.
7. New 100x75 stud partition with 12.5mm plasterboard both sides.
8. New double glazed sash window in built up opening. Allow for new D.P.C.
9. Existing chimney breast demolished.
10. Resin bounded gravel floor with under floor heating.
11. Curved wall clad in recycled glass tiles
12. Full height cedar saloon doors on soss hinges
13. Wardrobe 2400 lg X 600mm deep.
14. Chest of draws 1200mm high.
15. Timber floor to detail.

Revisions:

REV.A (13.12.06) STAIRCASE, SIZE OF BATHROOM AMENDED

earlearchitects
121 essex road
london n1 2en

t: 020 7226 2231
f: 020 7226 4288

info@earlearchitects.com
www.earlearchitects.com

Project: 87 Marchmont Street

Client: PAUL CLEMENT

Drawing Title: PROPOSED THIRD FLOOR PLAN

Scale: 1:50 @ A3

Date: JANUARY 2007

Drawing Status:

- FOR INFORMATION ☒
- FOR TENDER ☐
- FOR CONSTRUCTION ☐

Drawing no: DWG 060/SK 06 revision: A

Information based on preliminary measured survey. earle architects cannot accept responsibility for the accuracy of this information.

this drawing should be read in conjuction with all relevant drawings, specifications and other documents provided by the architect and engineers

Notes:

1. All dimensions and levels to be checked on site. Any discrepancies to be reported to architect before work commences.

2. Do not scale this drawing. Figured dimensions only to be taken.

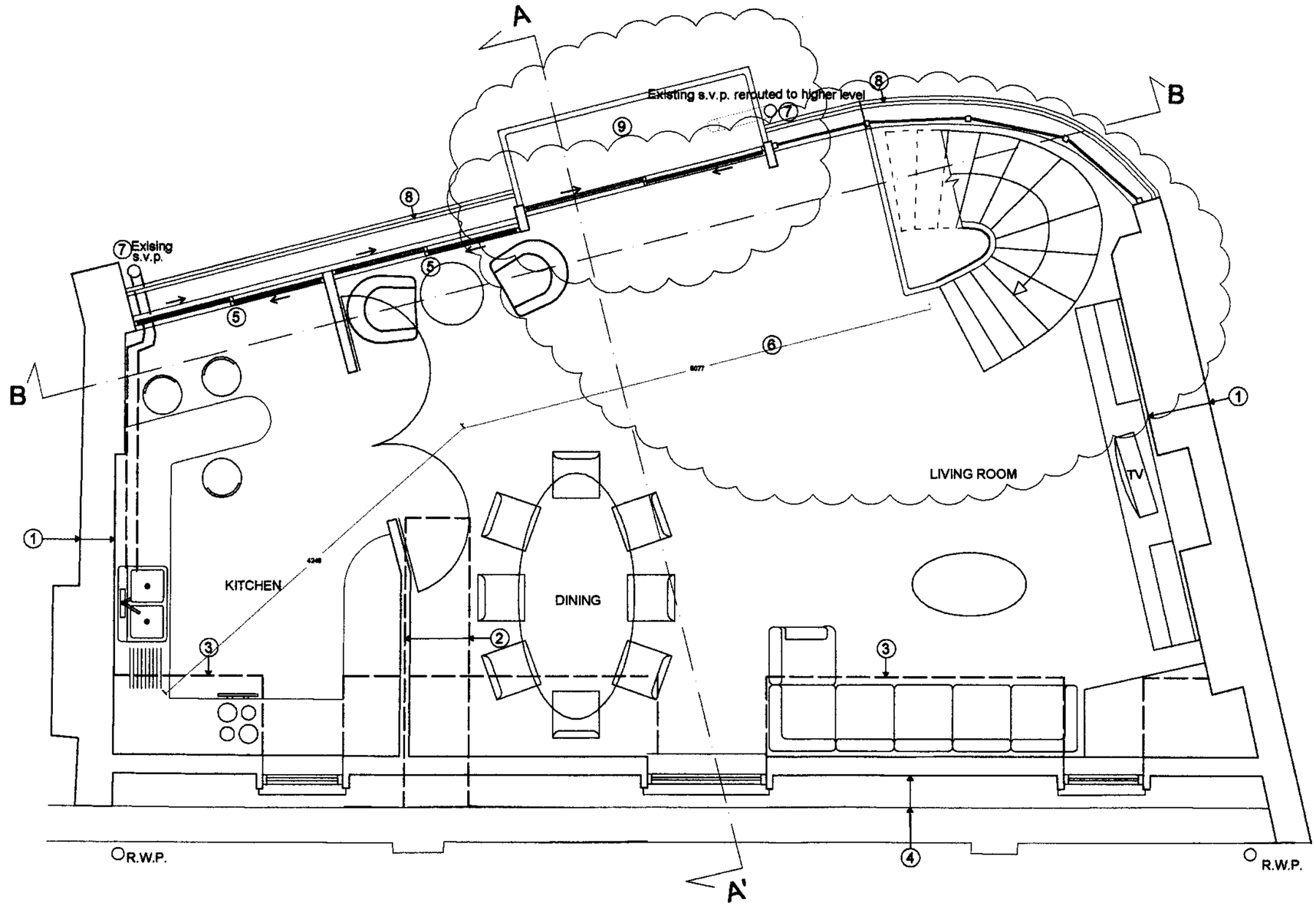

SCALE 1:50

PROPOSED FOURTH FLOOR PLAN (1 / SK/07)

KEY:

1. Existing party wall raised to engineer spec.
2. Existing chimneystack to be demolished.
3. dotted line denotes reduced floor to ceiling high.
4. Existing gutter to be taken up & replaced with new. Lead to existing falls to detail.
5. New double glazed sliding doors to detail.
6. New timber staircase to detail.
7. Existing Soil Vent Pipe to be raised above new roof.
8. New 110mm high balustrade with yacht wire infill to detail.
9. Proposed balcony

Revisions:

REV.A (13.12.06) STAIRCASE CHANGED, BALCONY ADDED

earlearchitects
121 essex road
london n1 2sn

t: 020 7226 2231
f: 020 7226 4266

info@earlearchitects.com
www.earlearchitects.com

Project: 87 Marchmont Street

Client: PAUL CLEMENT

Drawing Title: PROPOSED FOURTH FLOOR PLAN

Scale: 1:50 @ A3

Date: JANUARY 2007

Drawing Status:

FOR INFORMATION ☒
FOR TENDER ☐
FOR CONSTRUCTION ☐

Drawing no:

DWG 060/SK 07 revision: A

information based on preliminary measured survey. earle architects cannot accept responsibility for the accuracy of this information.

this drawing should be read in conjuction with all relevant drawings, specifications and other documents provided by the architect and engineers

Notes:

1. All dimensions and levels to be checked on site. Any discrepancies to be reported to architect before work commences.

2. Do not scale this drawing. Figured dimensions only to be taken.

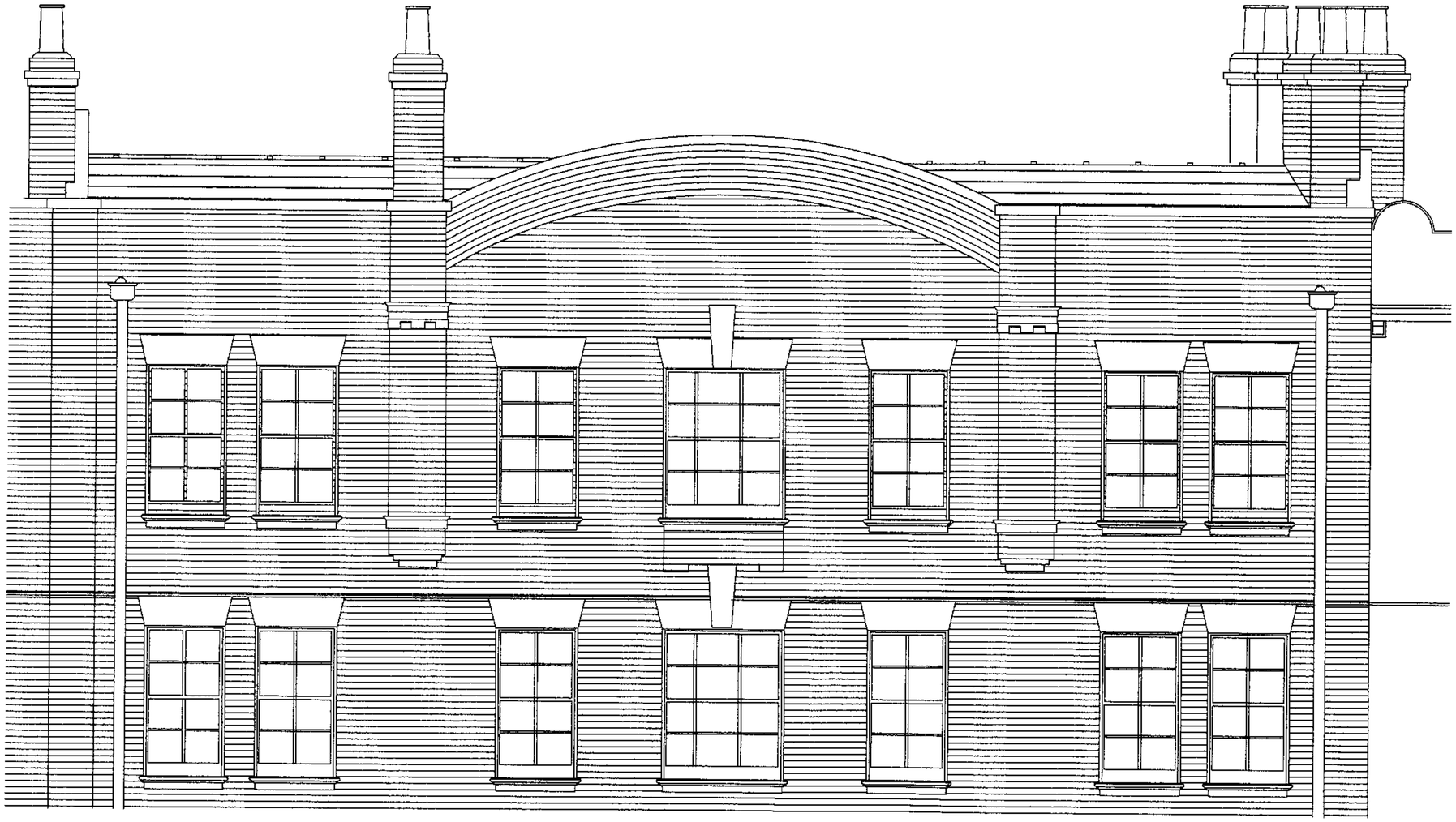

SCALE 1:50

EXISTING FRONT ELEVATION

1
SK/08

Revisions:

earlearchitects
121 essex road
london n1 2an

t: 020 7226 2231
f: 020 7226 4268

info@earlearchitects.com
www.earlearchitects.com

Project:
87 Marchmond Street

Client:
PAUL CLEMENT

Drawing Title:
EXISTING FRONT ELEVATION

Scale:
1:50 @ A3

Date:
JANUARY 2007

Drawing Status:

FOR INFORMATION ☒
FOR TENDER ☐
FOR CONSTRUCTION ☐

Drawing no:
DWG 060/SK 08 revision: ☐

information based on preliminary measured survey. earle architects cannot accept responsibility for the accuracy of this information.

this drawing should be read in conjuction with all relevant drawings, specifications and other documents provided by the architect and engineers

Notes:

1. All dimensions and levels to be checked on site. Any discrepancies to be reported to architect before work commences.

2. Do not scale this drawing. Figured dimensions only to be taken.

SCALE 1:50

PROPOSED FRONT ELEVATION (1 / SK/09)

KEY:

1. Natural slates fixed to 38X25mm battens.
2. New code 4 lead flashing.
3. All existing chimney pots to be taken down, cleaned and reused where possible or replaced to match existing.
4. New double glazed dormer windows to match first and second floor sashes.
5. New Zinc roof. Minimum pitch 5 degree.
6. Existing party wall built up. Detail T.B.A. with structural engineer.

Revisions:

REV.A (13.12.06) EXISTING ROOF LINE ADDED

earlearchitects
121 essex road
london n1 2an

t: 020 7226 2231
f: 020 7226 4268

info@earlearchitects.com
www.earlearchitects.com

Project: 87 Marchmont Street

Client: PAUL CLEMENT

Drawing Title: PROPOSED FRONT ELEVATION

Scale: 1:50 @ A3

Date: JANUARY 2007

Drawing Status:

- FOR INFORMATION ☒
- FOR TENDER ☐
- FOR CONSTRUCTION ☐

Drawing no: DWG 060/SK 09 revision: A

Information based on preliminary measured survey. earle architects cannot accept responsibility for the accuracy of this information

this drawing should be read in conjuction with all relevant drawings, specifications and other documents provided by the architect and engineers

Notes:

1. All dimensions and levels to be checked on site. Any discrepancies to be reported to architect before work commences.

2. Do not scale this drawing. Figured dimensions only to be taken.

SCALE 1:50

EXISTING REAR ELEVATION

1
SK/10

Revisions:

earlearchitects
121 essex road
london n1 2sn

t: 020 7226 2231
f: 020 7226 4288

info@earlearchitects.com
www.earlearchitects.com

Project: 87 Marchmont Street

Client: PAUL CLEMENT

Drawing Title: EXISTING REAR ELEVATION

Scale: 1:50 @ A3

Date: JANUARY 2007

Drawing Status:

FOR INFORMATION ☒
FOR TENDER ☐
FOR CONSTRUCTION ☐

Drawing no:

DWG 060/SK 10 revision: ☐

information based on preliminary measured survey. earle architects cannot accept responsibility for the accuracy of the information.

this drawing should be read in conjuction with all relevant drawings, specifications and other documents provided by the architect and engineers

Notes:

1. All dimensions and levels to be checked on site. Any discrepancies to be reported to architect before work commences.

2. Do not scale this drawing. Figured dimensions only to be taken.

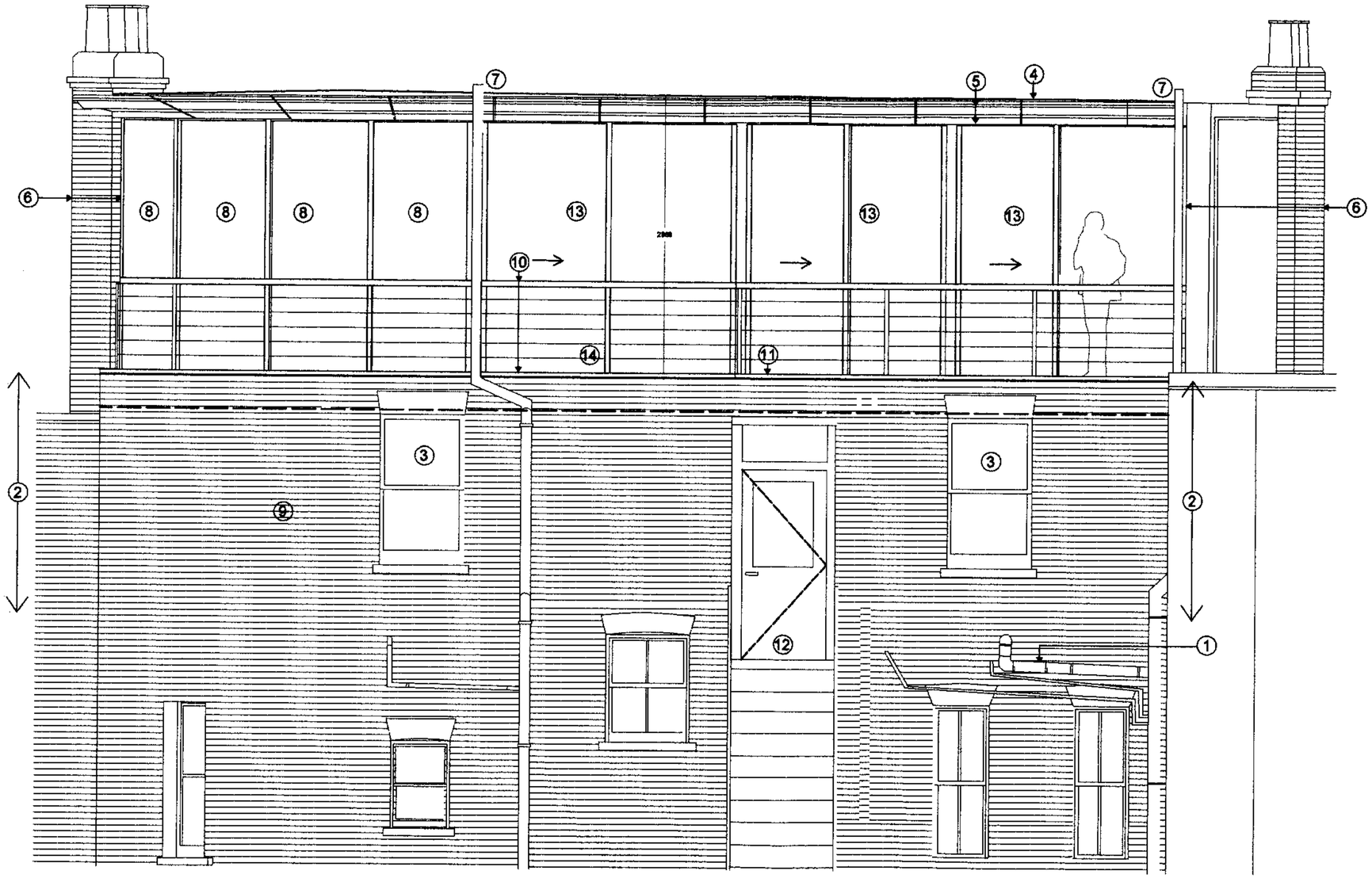

SCALE 1:50

PROPOSED REAR ELEVATION

1
SK/11

KEY:

1. Redundant waste fittings to be removed, make good to wall & stack.
2. New brickwork built up to match existing
3. New double glazed sash window into build up openings
4. New zink roof. minimum pitch 5°.
5. New Louvers by Levolux to detail.
6. Existing party wall & chimneystacks raised in brickwork to match existing
7. Existing soil vent pipe raised above new roof.
8. Full high double glazed obscured windows to detail.
9. Existing R.W.P. removed.
10. New 1100mm high balustrade with yacht wire infill to detail.
11. New Pre cast concrete capping on build up cavity wall.
12. Existing fire escape retained.
13. New double-glazed sliding doors to detail.
14. Proposed Balcony

Revisions:

earlearchitects
121 essex road
london n1 2an

t: 020 7226 2231
f: 020 7226 4288

info@earlearchitects.com
www.earlearchitects.com

Project: 87 Marchmont Street

Client: PAUL CLEMENT

Drawing Title: PROPOSED REAR ELEVATION

Scale: 1:50 @ A3

Date: JANUARY 2007

Drawing Status:

FOR INFORMATION ☒
FOR TENDER ☐
FOR CONSTRUCTION ☐

Drawing no:

DWG 060/SK 11 revision: ☐

information based on preliminary measured survey. earle architects cannot accept responsibility for the accuracy of this information.

this drawing should be read in conjuction with all relevant drawings, specifications and other documents provided by the architect and engineers

Notes:

1. All dimensions and levels to be checked on site. Any discrepancies to be reported to architect before work commences.

2. Do not scale this drawing. Figured dimensions only to be taken.

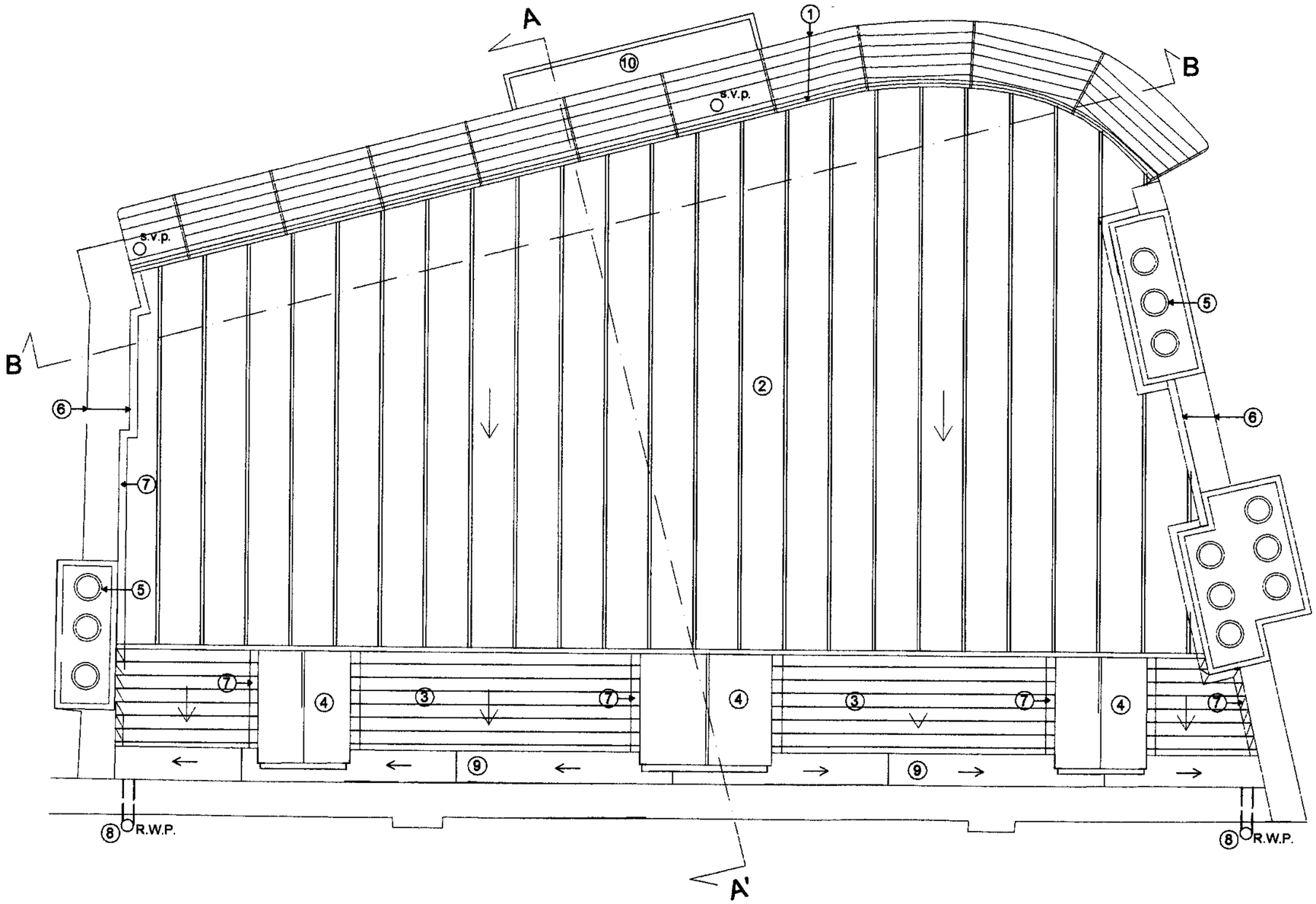

SCALE 1:50

PROPOSED ROOF PLAN

1 / SK/13

KEY:

1. New louvers By Levolux to detail.
2. New Zinc roof. 5° pitch minimum.
3. Natural slates fixed to 38X25mm battens.
4. New Code 6 Lead dormer.
5. Existing chimney pots to be taken down, cleaned and reused where possible or replaced to match existing.
6. Existing party wall build up. Detail T.B.A. with structural engineer.
7. New Code 4 lead flashing.
8. Existing RWPs to be increased in size T.B.C.
9. New stepped insulated lead valley gutter
10. Preposed fourth floor Balcony

Revisions:

earlearchitects
121 essex road
london n1 2an

t: 020 7226 2231
f: 020 7226 4288

info@earlearchitects.com
www.earlearchitects.com

Project: 67 Marchmont Street

Client: PAUL CLEMENT

Drawing Title: PROPOSED ROOF PLAN

Scale: 1:50 @ A3

Date: JANUARY 2007

Drawing Status:

FOR INFORMATION ☒
FOR TENDER ☐
FOR CONSTRUCTION ☐

Drawing no:

DWG 060/SK 13 revision: ☐

Information based on preliminary measured survey. earle architects cannot accept responsibility for the accuracy of this information

This drawing should be read in conjunction with all relevant drawings, specifications and other documents provided by the architect and engineers

Notes:

1. All dimensions and levels to be checked on site. Any discrepancies to be reported to architect before work commences.

2. Do not scale this drawing. Figured dimensions only to be taken.

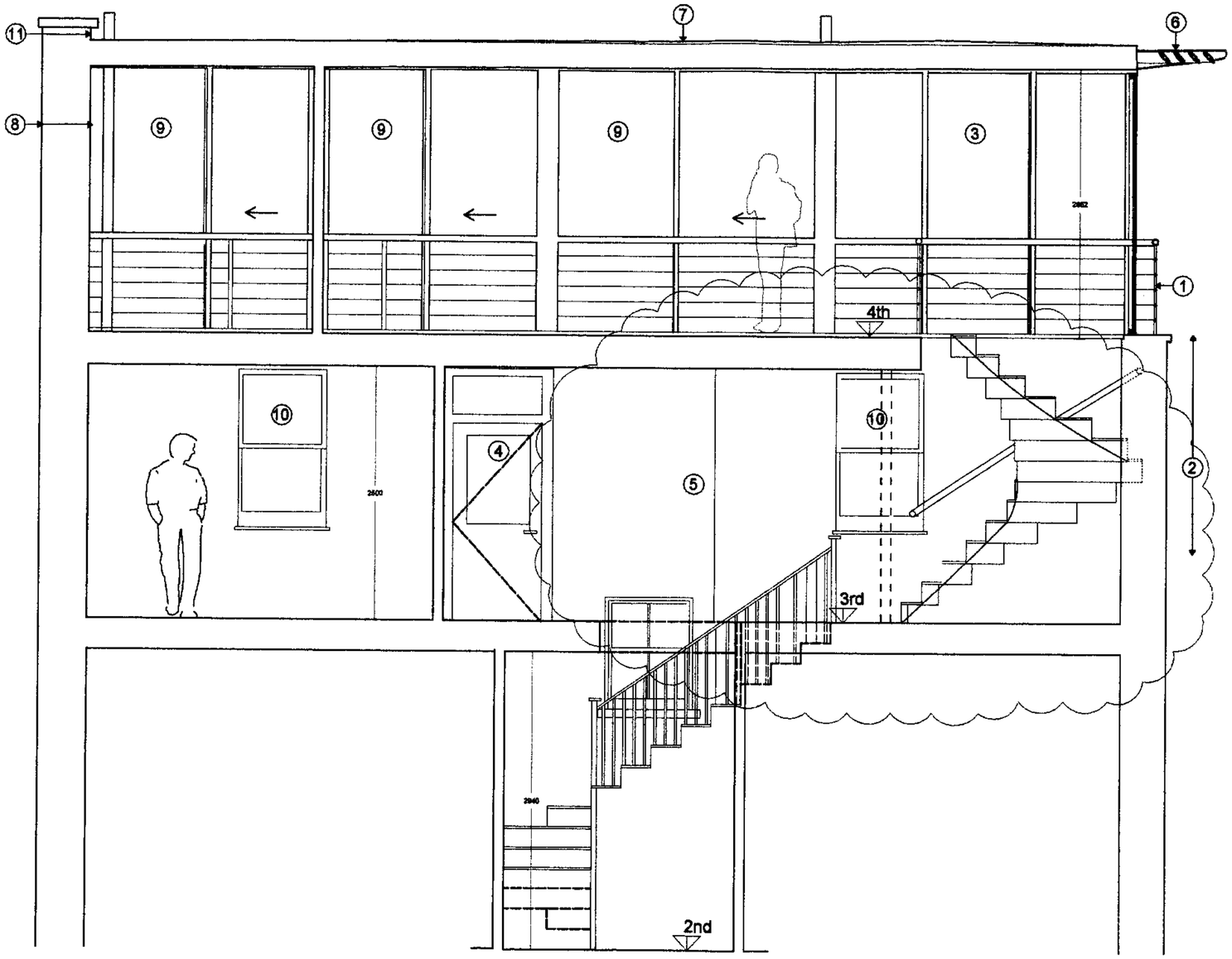

SCALE 1:50

PROPOSED SECTION BB'

1
SK/14

KEY:

1. New 1100mm high balustrade with yacht wire infill to detail
2. New cavity wall build up on top of existing wall. New brickwork to match existing.
3. New Full height obscured double glazed windows to detail
4. Existing fire escape retained.
5. New timber staircase to detail.
6. New louvers By Levolux to detail.
7. New Zink roof. Allow for 5°pitch.
8. Existing party wall build up. Detail T.B.A. with structural engineer.
9. New sliding double glazed sliding doors to detail.
10. New double glazed sash windows.
11. New code 4 lead flashing.

Revisions:

REV.A (13.12.06) STAIRCASE CHANGED,

earlearchitects
121 essex road
london n1 2an

t: 020 7226 2231
f: 020 7226 4288

info@earlearchitects.com
www.earlearchitects.com

Project: 87 Marchmont Street

Client: PAUL CLEMENT

Drawing Title: PROPOSED SECTION BB'

Scale: 1:50 @ A3

Date: JANUARY 2007

Drawing Status:

FOR INFORMATION ☒
FOR TENDER ☐
FOR CONSTRUCTION ☐

Drawing no:

DWG 060/SK 14 revision: A

Information based on preliminary measured survey. earle architects cannot accept responsibility for the accuracy of this information

this drawing should be read in conjunction with all relevant drawings, specifications and other documents provided by the architect and engineers

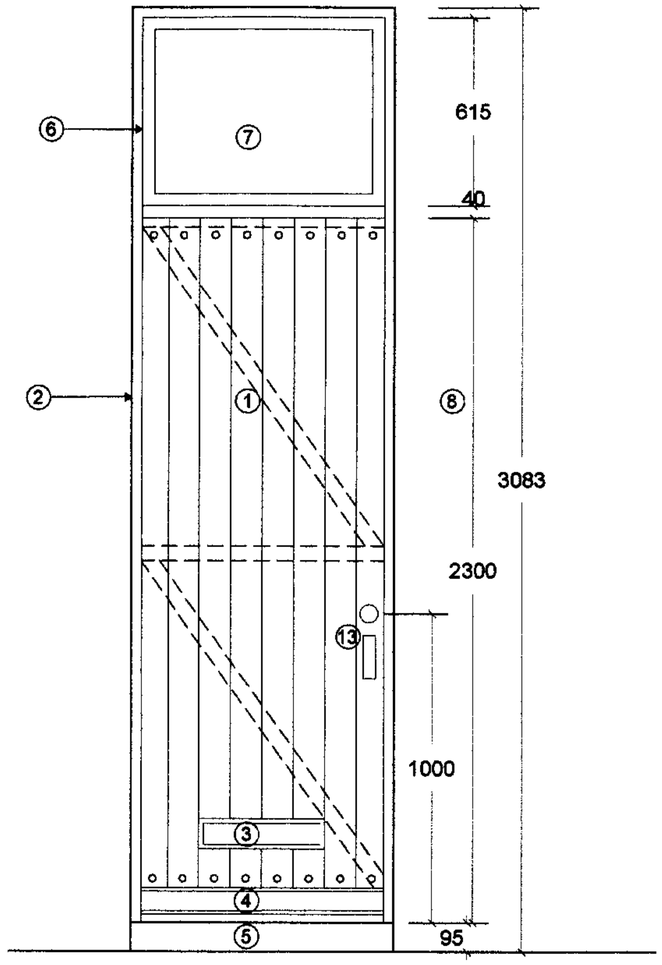

SCALE 1:20
PROPOSED EXTERNAL ELEVATION (1 / SK/15)

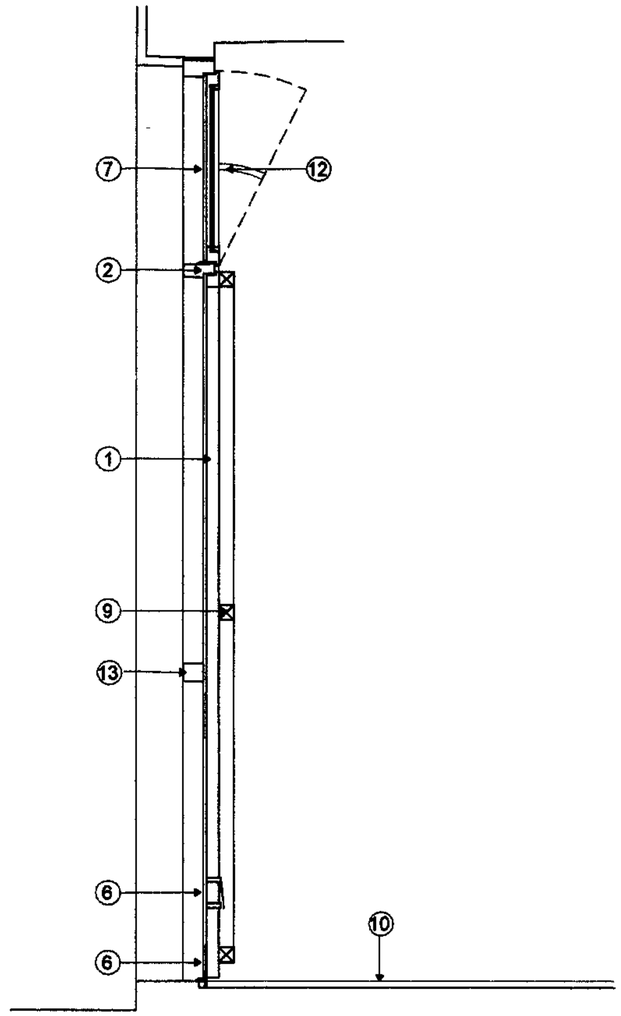

SCALE 1:20
PROPOSED SECTION (3 / SK/15)

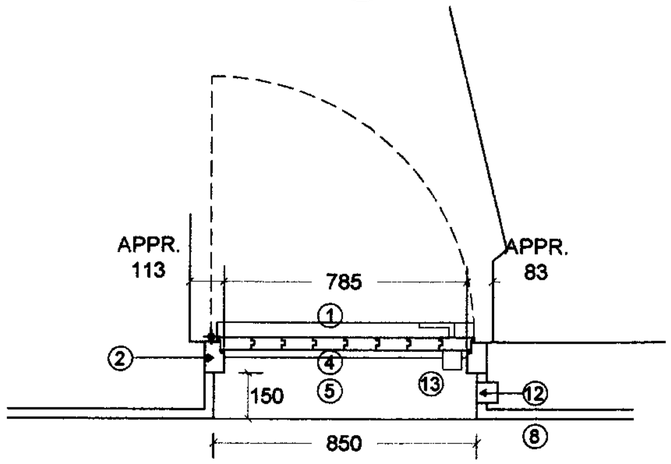

SCALE 1:20
PROPOSED PLAN (2 / SK/15)

Notes:

1. All dimensions and levels to be checked on site. Any discrepancies to be reported to architect before work commences.

2. Do not scale this drawing. Figured dimensions only to be taken.

KEY:

1. 40MM THICK TREATED OAK, TONGUED AND GROOVED WITH BLACK COACH BOLTS TOP AND BOTTOM.
2. DOOR AND WINDOW FRAMES PAINTED WHITE.
3. NEW LETTERBOX CUT INTO TIMBER DOOR AND SEALED
4. STAINLESS STEEL KICKPLATE WITH THREASHOLD DETAIL.
5. EXISTING STEP CLEANED AND SEALED.
6. NEW DOUBLE GLAZED WINDOW IN FRAME, PAINTED WHITE.
7. OPAQUE FILM '87' APPLIED TO INSIDE OF WINDOW.
8. EXISTING MARBLE CLADDING.
9. NOMINAL 50X50MM BACK SUPPORT TO T+G TIMBER PLANKS FIXED WITH STAINLESS STEEL SCREWS.
10. NEW COIR ENTRANCE MAT IN STAINLESS STEEL FRAME
11. 2NO WINDOW STAYS FOR INWARD OPENING FAN LIGHT
12. EXISTING INTERCOM
13. NEW ALUMINIUM DOOR HANDLE BY ALLGOOD AND REUSE EXISTING LOCK.

PLEASE NOTE:

NEW DOOR HEIGHT TO MATCH NEXT DOOR DOOR HEIGHT.

ALTERNATIVE TO ABOVE SPECIFICATION USE OFF THE SHELF DOOR AND FIX 22MM TREATED TONGUED AND GROOVED OAK PLANKS TO DOOR.

Revisions:

earlearchitects
121 essex road
london n1 2an

t: 020 7226 2251
f: 020 7226 4288

info@earlearchitects.com
www.earlearchitects.com

Project: 87 Marchmont Street

Client: PAUL CLEMENT

Drawing Title: PROPOSED ENTRANCE DOOR

Scale: 1:20 @ A3

Date: JANUARY 2007

Drawing Status:

- FOR INFORMATION ☒
- FOR TENDER ☐
- FOR CONSTRUCTION ☐

Drawing no:

DWG 060/SK 15 revision: ☐

information based on preliminary measured survey. earle architects cannot accept responsibility for the accuracy of this information.

this drawing should be read in conjunction with all the work schedule, specifications and other documents provided by the architect and engineers

Notes:

1. All dimensions and levels to be checked on site. Any discrepancies to be reported to architect before work commences.

2. Do not scale this drawing. Figured dimensions only to be taken.

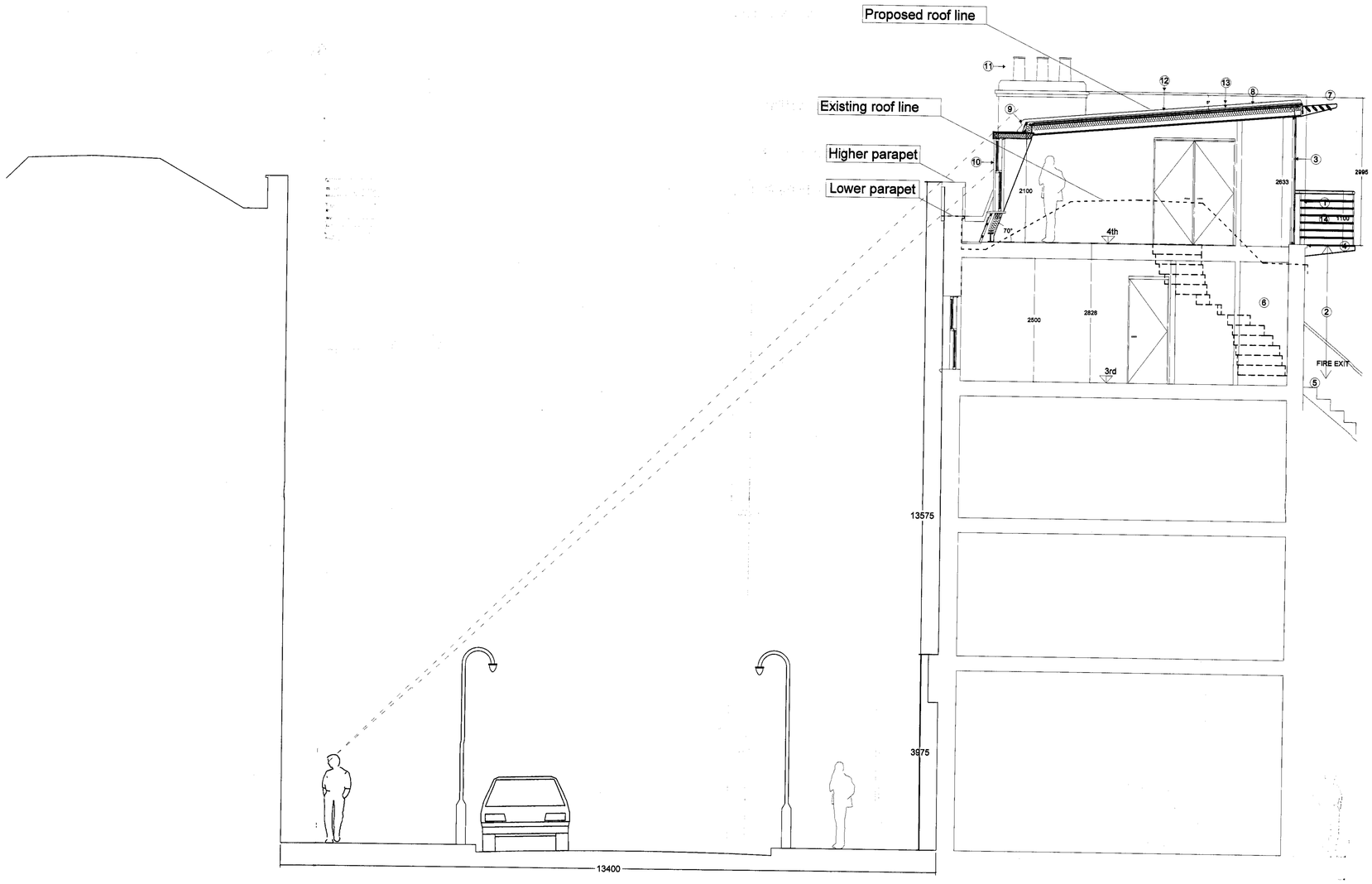

SCALE 1:50

PROPOSED SECTION AA with street view (1 / SK/16)

KEY:

1. New 1100mm high balustrate with yacht wire infill to detail
2. New cavity wall build up on top of existing wall. New brickwork to match existing.
3. New Full high double glazed windows to detail
4. New pre cast concrete capping on build up cavity wall.
5. Existing fire escape retained.
6. New timber staircase to detail.
7. New louvers By Levolux to detail.
8. New Zinc roof. Allow for 5°pitch.
9. Natural slates fixed to 38X25mm battens.
10. New double glazed dormer windows to match first and second floor sashes.
11. Existing chimney pots to be taken down, cleaned and reused where possible or replaced to match existing.
12. Existing party wall build up. Detail T.B.A. with structural engineer.
13. code 4 lead flashing.
14. Proposed balcony

RECEIVED 29 JAN 2007

Revisions:

REV.A (23.01.07) Resized to A1 to meet planners request

earlearchitects
121 essex road
london n1 2sn

t: 020 7226 2231
f: 020 7226 4288

info@earlearchitects.com
www.earlearchitects.com

Project: 87 Marchmond Street

Client: PAUL CLEMENT

Drawing Title: PROPOSED SECTION AA WITH STREET VIEW

Scale: 1:100 @ A3, 1:50 @ A1

Date: JANUARY 2007

Drawing Status:

- FOR INFORMATION ☒
- FOR TENDER ☐
- FOR CONSTRUCTION ☐

Drawing no: DWG 060/SK 16 revision: A

Information based on preliminary measured survey, earle architects cannot accept responsibility for the accuracy of this information.

this drawing should be read in conjuction with all relevant drawings, specifications and other documents provided by the architect and engineers