Y Series (8-14hp)

R410A Heat Pump or Cooling Only Outdoor Unit

Improved for even higher efficiency

The City Multi Y series makes use of a two pipe refrigerant circuit throughout with the choice of either Branch Pipe or Header Pipe feeds to indoor units, with manual changeover from cooling to heating to ensure that a constant indoor climate is maintained. Available in 4 versions for either heating and cooling or 2 for cooling only, the system accommodates up to 20 indoor units for each outdoor unit.

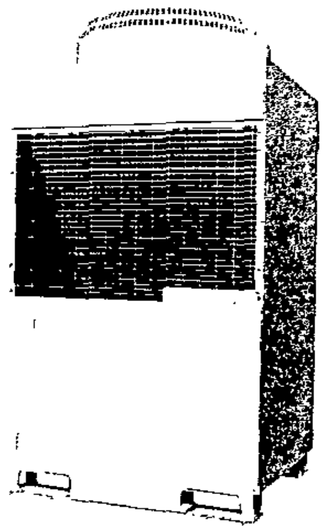

- Highest ever COP's / EER's due to new higher efficiency inverter technology
- Choice of Branch Pipe or Header Pipe feeds to indoor units
- Energy-saving inverter driven outdoor compressor units with very low start currents
- No requirement for plant rooms or bulky service shafts
- 4 capacities from 8hp to 14hp, using a single inverter compressor
- Improved pipe run of 150m, with a total system pipe length of 300m
- High Sensible Cooling Function - By raising the off coil temperature, a 10% increase in sensible cooling capacity over standard operation is achievable, the result being greater comfort for occupants

OPTIONAL R410A

Technical Information >>

MODEL REFERENCE		PUHY-P200YGM-A	PU(H)Y-P250YGM-A	PUHY-P300YGM-A	PU(H)Y-P350YGM-A
CAPACITY (kW)	Heating (nominal)	25.0	31.5	37.5	45.0
	Cooling (nominal)	22.4	28.0	33.5	40.0
	Heating (UK)	23.1	29.1	33.0	39.6
	Cooling (UK)	21.3	26.6	31.5	37.6
POWER INPUT (kW)	Heating (nominal)	5.98	7.62	9.10	11.02
	Cooling (nominal)	6.14	7.72	9.57	11.39
	Heating (UK)	5.98	7.62	8.83	10.69
	Cooling (UK)	3.81	4.79	6.99	8.31
MAX No. OF CONNECTABLE INDOOR UNITS		13	16	19	20
AIRFLOW (m3/min)	High	200	200	200	200
NOISE (dBA)		56	57	59	60
WEIGHT (kg)		218	233	233	233
DIMENSIONS (mm)	Width	990	990	990	990
	Depth	840 (877)	840 (877)	840 (877)	840 (877)
	Height	1840	1840	1840	1840
ELECTRICAL SUPPLY		380-415v, 50Hz	380-415v, 50Hz	380-415v, 50Hz	380-415v, 50Hz
PHASE		3	3	3	3
STARTING CURRENT (A)		10	8	8	8
RUNNING CURRENT (A)	Heating	9.2	11.7	14.0	17.0
	Cooling	9.4	11.9	14.7	17.6
FUSE RATING (BS88) – HRC (A)		20	25	25	37
MAINS CABLE No. Cores		4 + earth	4 + earth	4 + earth	4 + earth

PU(H)Y-P200-350YGM-A Piping Restrictions	
TOTAL PIPING LENGTH	300m max
FURTHEST PIPING LENGTH	150m max
FURTHEST PIPING LENGTH AFTER 1st BRANCH	40m max
BETWEEN INDOOR AND OUTDOOR UNITS - HEIGHT	50m max (40m max if outdoor installed below)
BETWEEN INDOOR AND INDOOR UNITS - HEIGHT	15m max

PU(H)Y-P200, 250, 300, 350YGM-A

Upper View >

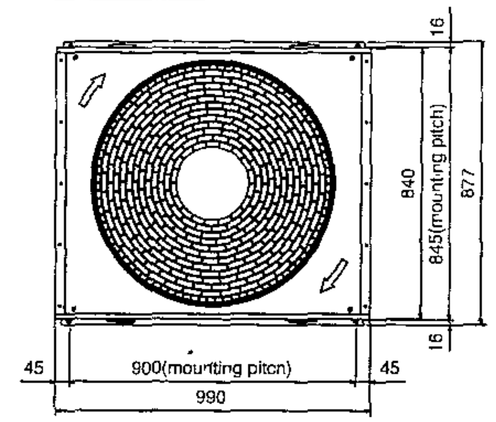

Right Side View >

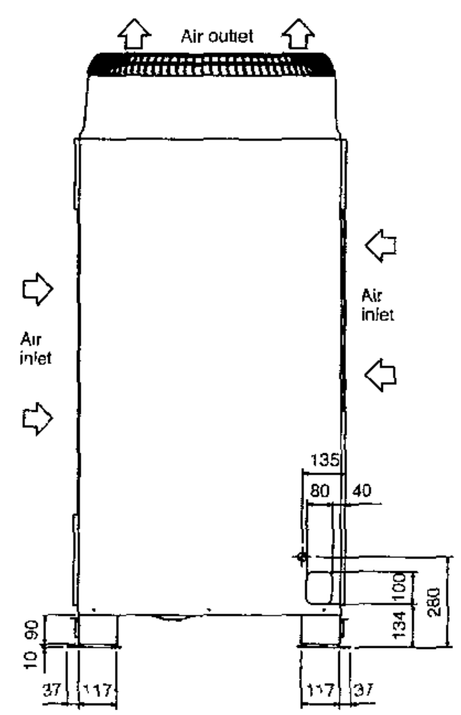

Front View >

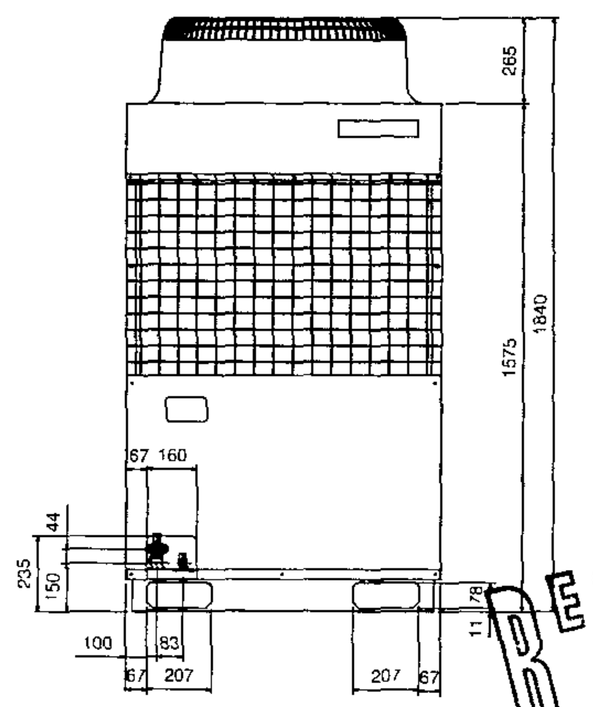

RECEIVED
- 9 FEB 2007

66-72 GOWER STREET
DETAILS OF AIR CONDITIONING UNIT.
DRAWING D1 - SECTION
8/02/07

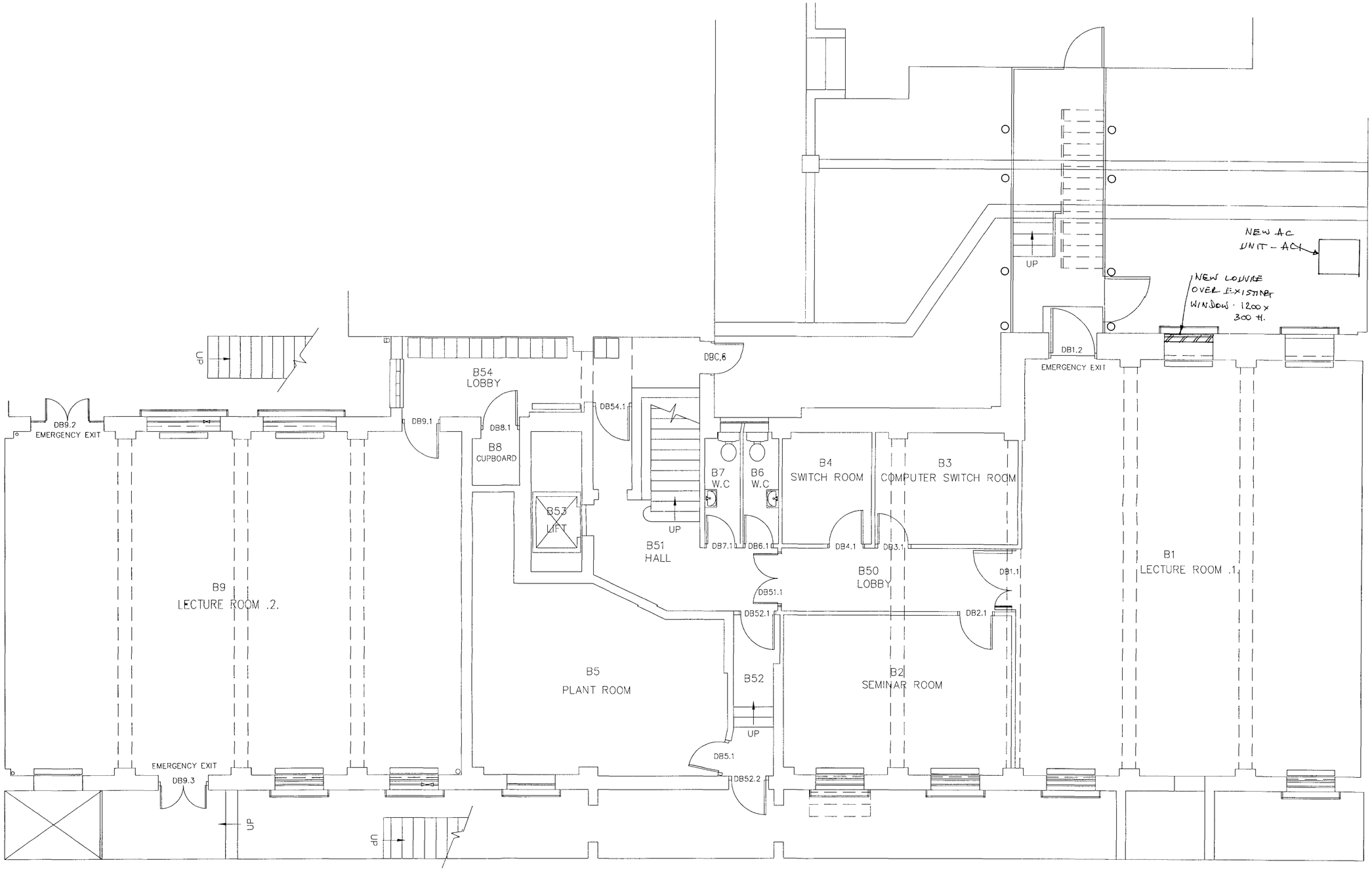

NOTES

DO NOT SCALE OFF THIS DRAWING.

ALL DIMENSIONS MUST BE CHECKED ON SITE PRIOR TO ANY WORK BEING PUT IN HAND.

ANY DISCREPANCIES ARE TO BE BROUGHT TO THE ATTENTION OF THE PROJECT OFFICER IMMEDIATELY UPON DISCOVERY.

LETTER	DATE	REVISION
B1	8/02/07	PLANNING ISSUE.

UCL

ESTATES AND FACILITIES DIVISION

GOWER STREET, LONDON WC1E 6BT

DRAWN: S.S.	FILE:
DATE: JULY 93	SCALE: 1:50

66–72 GOWER STREET

PROPOSED AIR CONDITIONING SCHEME.

BASEMENT PLAN

DWG. NO.	87	01	B1

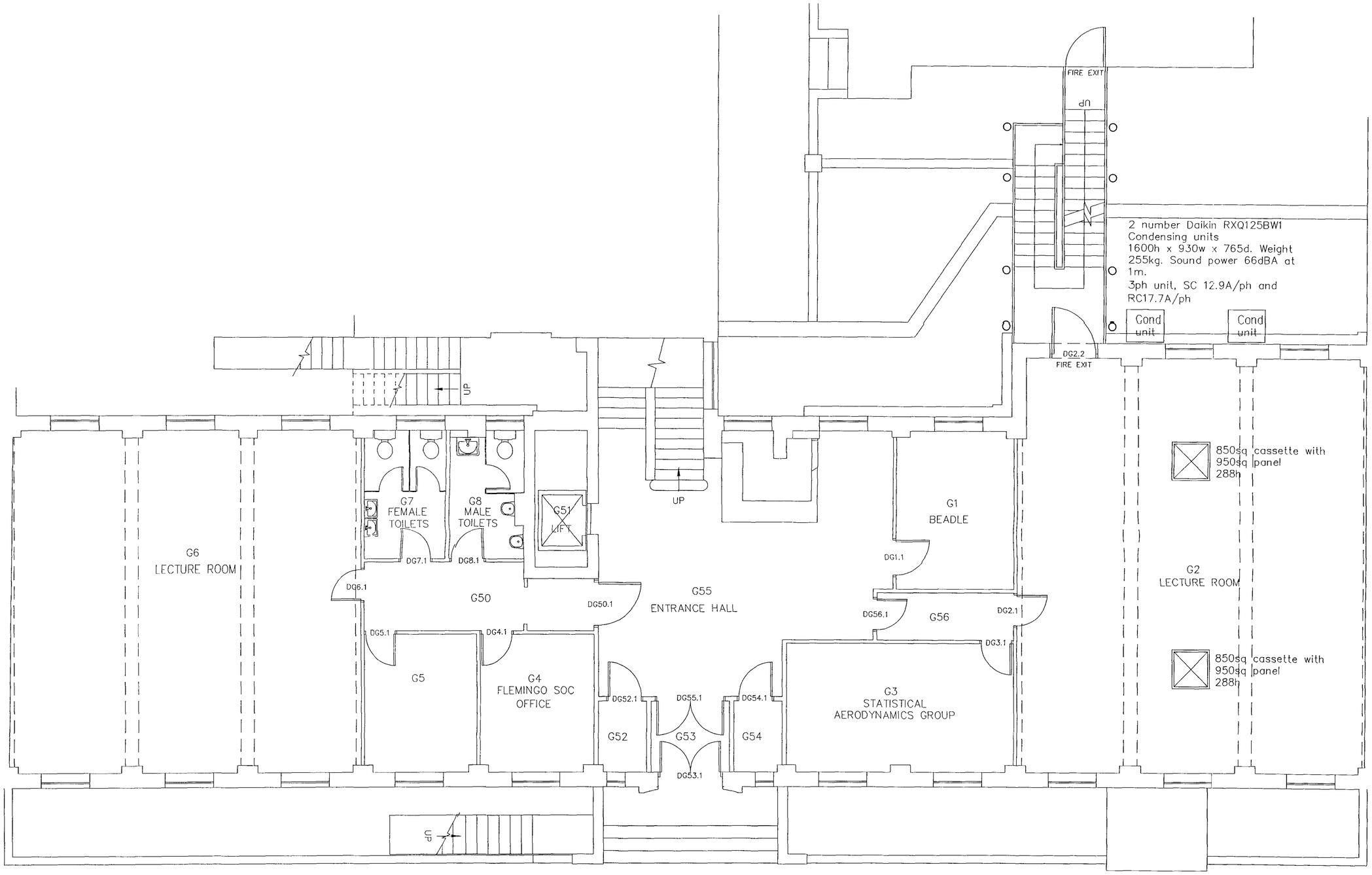

NOTES

DO NOT SCALE OFF THIS DRAWING.

ALL DIMENSIONS MUST BE CHECKED ON SITE PRIOR TO ANY WORK BEING PUT IN HAND.

ANY DISCREPANCIES ARE TO BE BROUGHT TO THE ATTENTION OF THE PROJECT OFFICER IMMEDIATELY UPON DISCOVERY.

LETTER	DATE	REVISION

UCL

ESTATES AND FACILITIES DIVISION

GOWER STREET, LONDON WC1E 6BT

DRAWN: K.S.	FILE:
DATE: MAY 06	SCALE: 1:50

66–72 GOWER STREET

MECHANICAL SEVICES

LAYOUT

GROUND FLOOR PLAN

DWG. NO.	87	50	37