a1

1. Proposed wind turbine and PV cell as part of proprietary renewable energy system:
   Wind turbine dimensions: diam 503mm
   PV cell dimensions: W600xH500xD50mm
2. Proposed new 6m high steel post to support renewables system
3. Existing fence & gate
4. Existing retaining wall
5. Existing sports ground
6. Existing transportable Classroom
7. Existing concrete wall
8. Existing steps

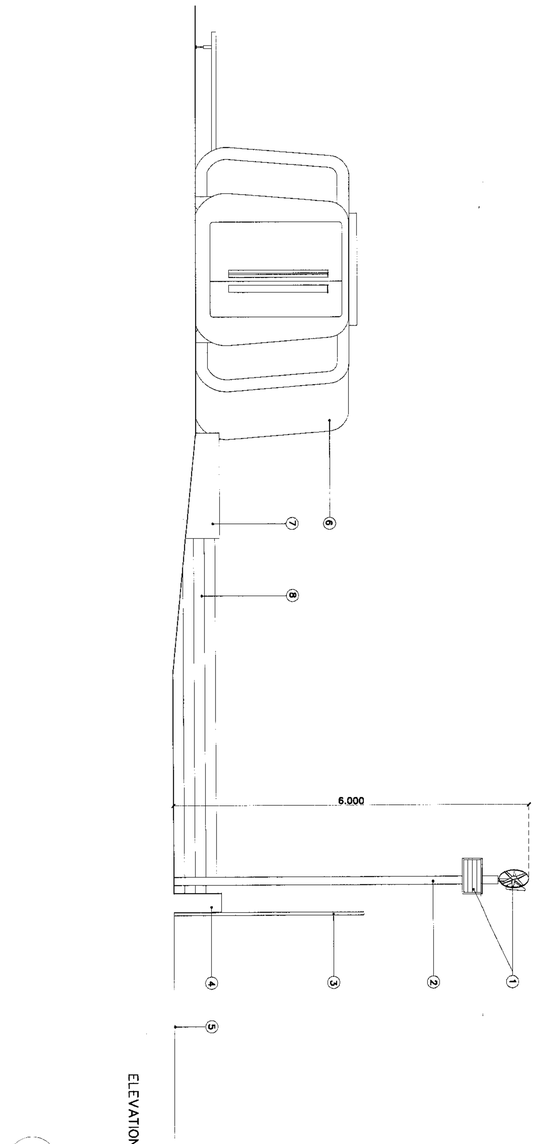

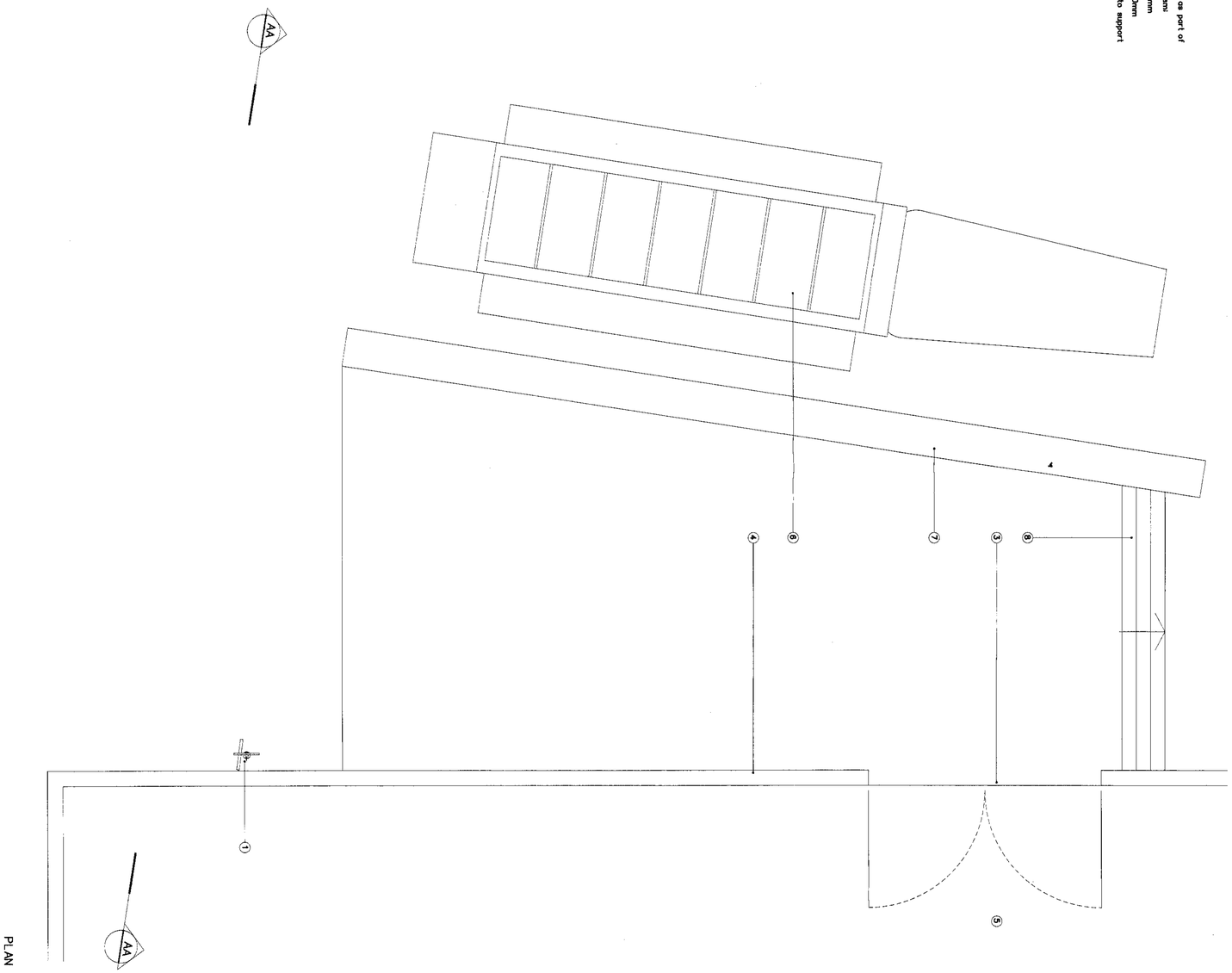

Haverstock School
Classroom of the Future

CAD file no.	Date	Scale
160-03planning renew.dgn	12.03.07	1:50

Status: Planning

Drawn | Checked

Drawing Title: Proposed renewables energy system

Job No	Drg No	Rev
160	03	-

gollifer langston architects

48 Poland Street London W1F 7ND
tel 020 7734 2134 fax 020 7734 2141 email info@gollifer.co.uk

Gollifer Langston Architects Ltd registered in England and Wales no 4394316
Do not scale from drawings. All dimensions to be checked on site by contractor and such dimensions to be the contractors responsibility. Drawing errors and omissions to be reported to the architect.

Metres: 0

Rev	Date	Amendment	By	Checked
	12.03.07	Planning		

RECEIVED 13 MAR 2007