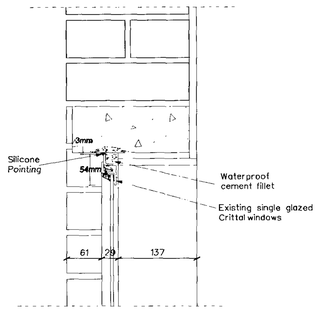

1.Existing Wall to window head detail

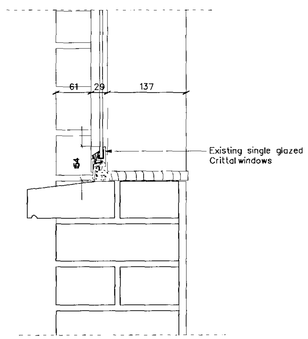

2. Existing Wall to window cill detail

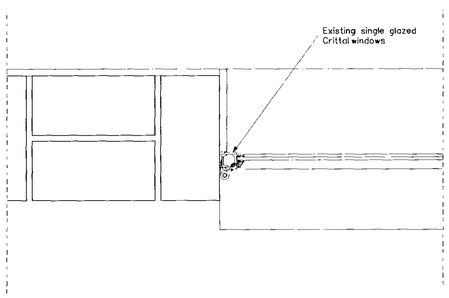

3. Existing wall to window jamb detail

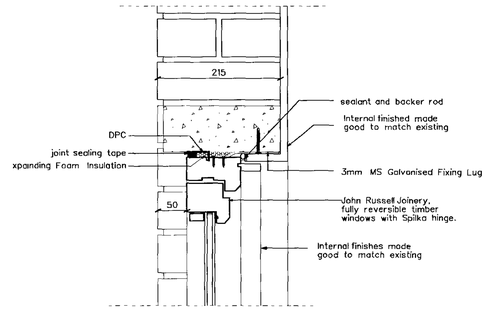

4. Proposed Wall to window head detail

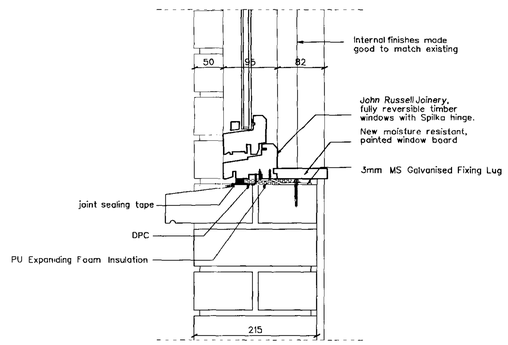

5. Proposed wall to window cill detail

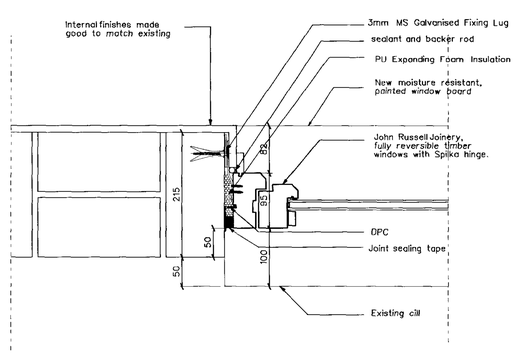

6. Proposed wall to window jamb detail.

7.

8.

9.

notes

1. Do not scale from this drawing
2. Work to figured dimensions where shown
3. Confirm dimensions on site before fabrication or construction - report any discrepancies to CA

rev	date	description	by
P1	20.12.06	Planning Issue	er

drawing amendments

Shepheard Epstein Hunter
Architecture Planning Landscape

Phoenix Yard, 65 Kings Cross Road, London WC1X 9LW
tel: 020 7841 7500 fax: 020 7841 7575
email: architecture@seh.co.uk web: www.seh.co.uk

project
Rasing the Standard

client
London Borough of Camden

drawing status	scale	size
Planning	1:5	A1
drawing: 1 - 12 Ruscombe Existing and proposed window details	job no. 06189	
	drawing no. 325	rev. P1