DO NOT SCALE DIMENSIONS OFF THIS DRAWING
CHECK ALL DIMENSIONS ON SITE BEFORE FABRICATION
REPORT ALL ERRORS OR OMISSIONS TO SPRUNT LIMITED
THIS DRAWING IS PROTECTED UNDER COPYRIGHT AND
SHALL NOT BE REPRODUCED IN PART OR WHOLE WITHOUT
PRIOR EXPRESSED PERMISSION OF SPRUNT LIMITED

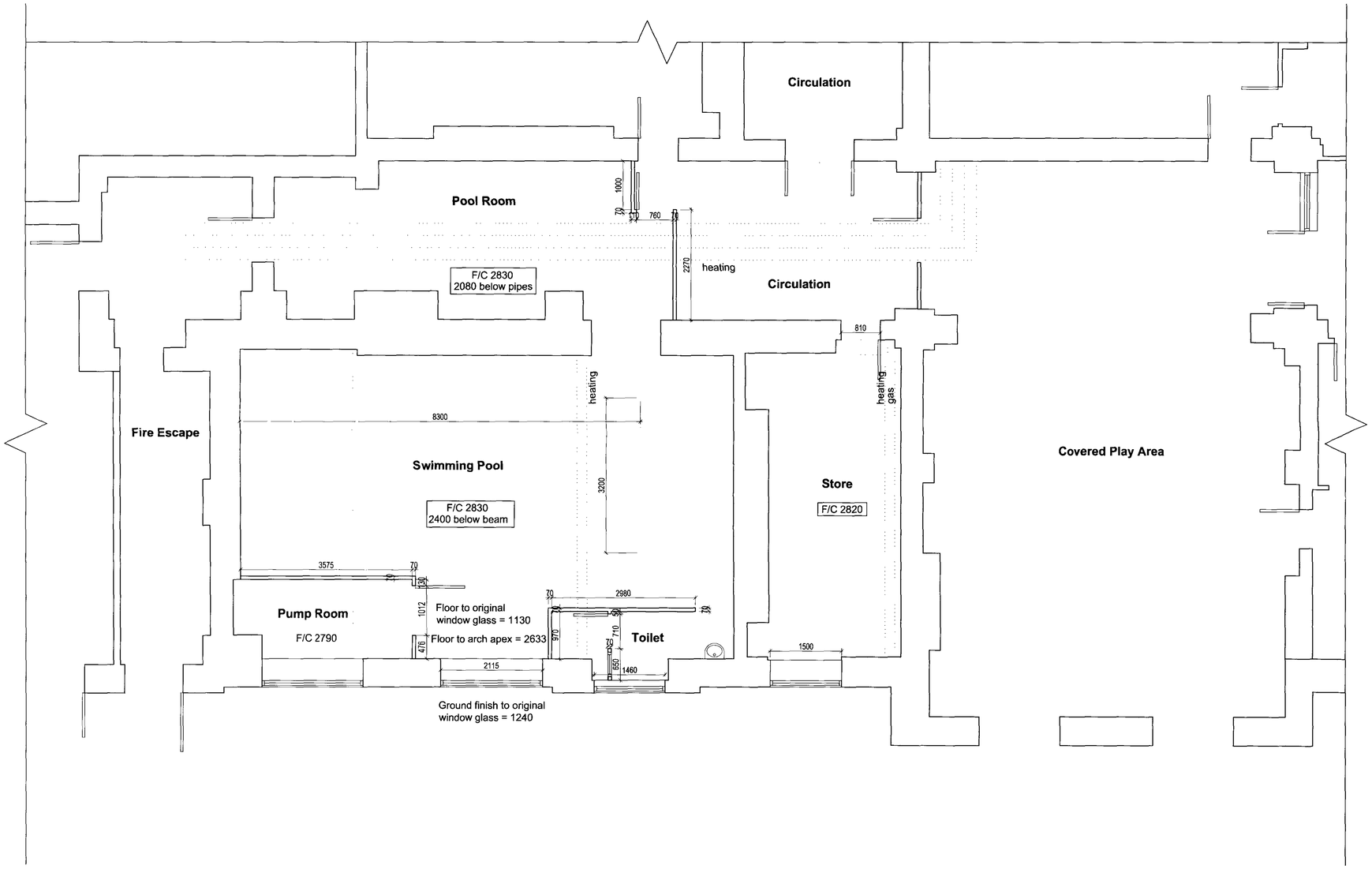

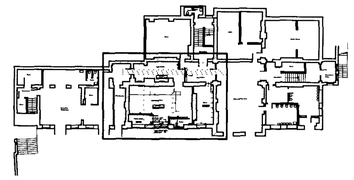

Location Plan

KEY

Pipes

Beams

rev:	date:	note:	by:
P1	13.11.06	changed status to read 'For Planning'	

STATUS
For Planning

CONTRACTOR
n/a

PROJECT
Primrose Hill Primary School

CLIENT
LB Camden
Education Department

DRAWING TITLE
Lower Ground Floor
Existing

DATE 26/07/06
SCALE 1:50@A1/1:100@A3
DRAWN HW
CHECKED
DRAWING No 10875_11_01
REVISION P1

SPRUNT The Quadrangle, 2nd FL, 180 Wardour Street, London W1F 8FY
T +44 (0)20 7287 1153 F +44 (0)20 7287 3675
www.sprunt.net

DO NOT SCALE DIMENSIONS OFF THIS DRAWING
CHECK ALL DIMENSIONS ON SITE BEFORE FABRICATION
REPORT ALL ERRORS OR OMISSIONS TO SPRUNT LIMITED
THIS DRAWING IS PROTECTED UNDER COPYRIGHT AND
SHALL NOT BE REPRODUCED IN PART OR WHOLE WITHOUT
PRIOR EXPRESSED PERMISSION OF SPRUNT LIMITED

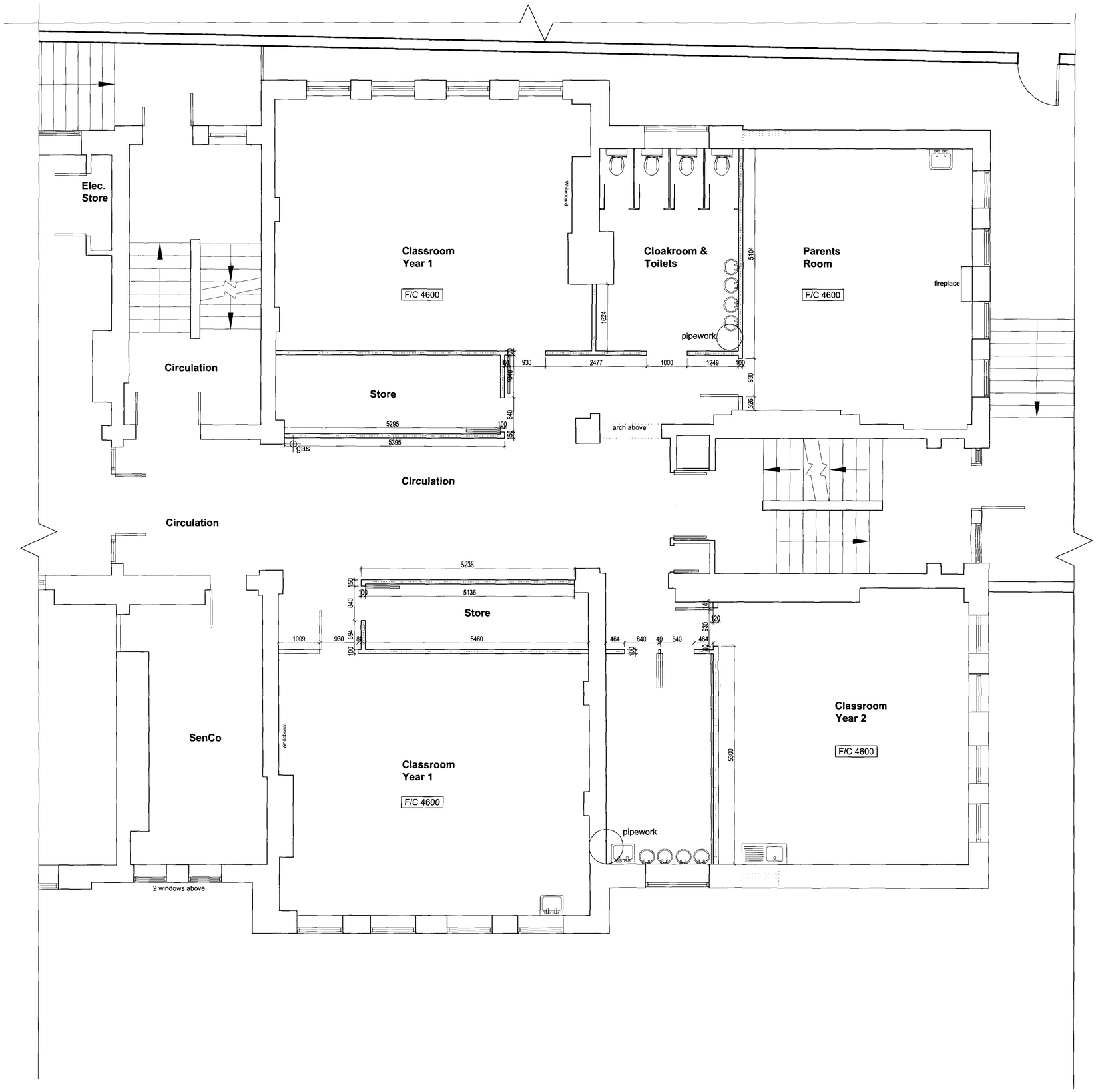

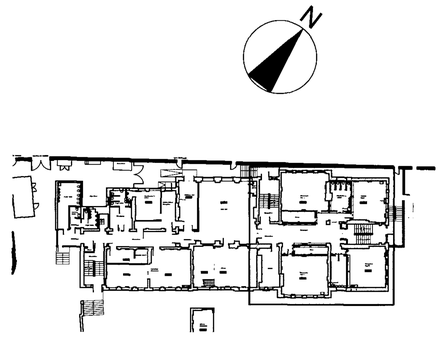

Location Plan

KEY

Pipes

Beams

rev:	date:	note:	by:
P1	13.11.06	changed status to read 'For Planning'	

STATUS
For Planning

CONTRACTOR
n/a

PROJECT
Primrose Hill Primary School

CLIENT
LB Camden
Education Department

DRAWING TITLE
Ground Floor (North)
Existing

DATE 26/07/06
SCALE 1:50@A1/1:100@A3
DRAWN HW
CHECKED
DRAWING No 10875_11_02
REVISION P1

SPRUNT The Quadrangle, 2nd FL, 180 Wardour Street, London W1F 8FY
T +44 (0)20 7287 1153 F +44 (0)20 7287 3675
www.sprunt.net

DO NOT SCALE DIMENSIONS OFF THIS DRAWING
CHECK ALL DIMENSIONS ON SITE BEFORE FABRICATION
REPORT ALL ERRORS OR OMISSIONS TO SPRUNT LIMITED
THIS DRAWING IS PROTECTED UNDER COPYRIGHT AND
SHALL NOT BE REPRODUCED IN PART OR WHOLE WITHOUT
PRIOR EXPRESSED PERMISSION OF SPRUNT LIMITED

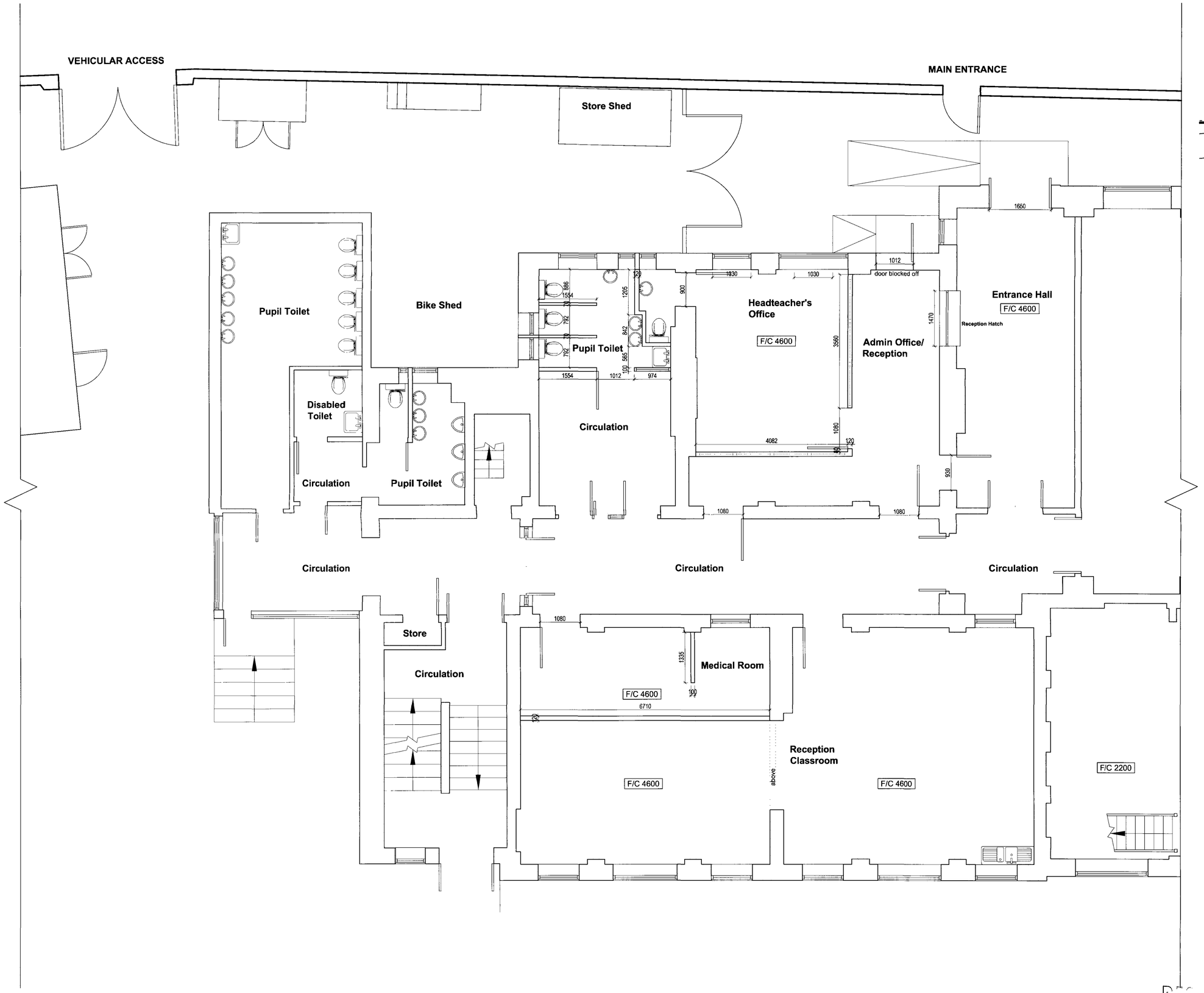

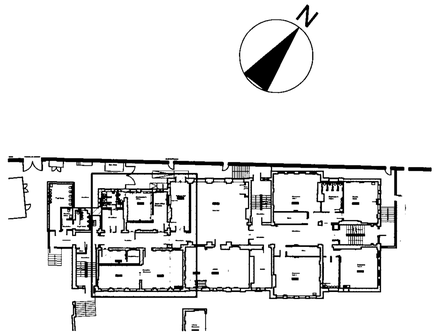

Location Plan

KEY

Pipes

Beams

rev:	date:	note:	by:
P1	13.11.06	changed status to read 'For Planning'	

STATUS
For Planning

CONTRACTOR
n/a

PROJECT
Primrose Hill Primary School

CLIENT
LB Camden
Education Department

DRAWING TITLE
Ground Floor (South)
Existing

DATE 26/07/06
SCALE 1:50@A1/1:100@A3
DRAWN HW
CHECKED
DRAWING No 10875_11_03
REVISION P1

SPRUNT The Quadrangle, 2nd FL, 180 Wardour Street, London W1F 8FY
T +44 (0)20 7287 1153 F +44 (0)20 7287 3675
www.sprunt.net

DO NOT SCALE DIMENSIONS OFF THIS DRAWING
CHECK ALL DIMENSIONS ON SITE BEFORE FABRICATION
REPORT ALL ERRORS OR OMISSIONS TO SPRUNT LIMITED
THIS DRAWING IS PROTECTED UNDER COPYRIGHT AND
SHALL NOT BE REPRODUCED IN PART OR WHOLE WITHOUT
PRIOR EXPRESSED PERMISSION OF SPRUNT LIMITED

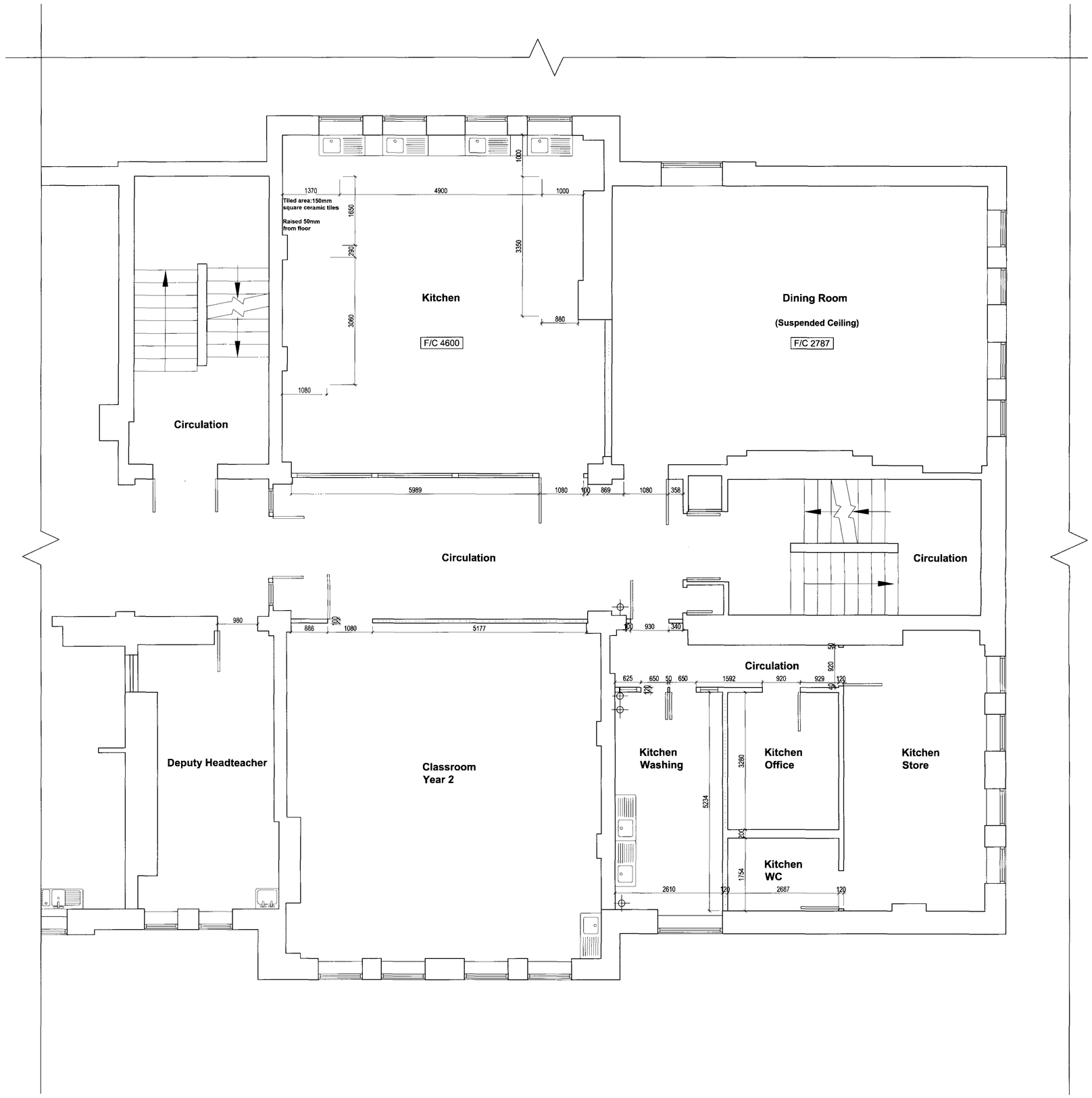

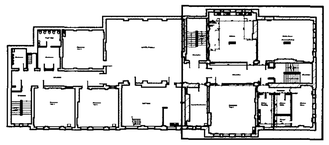

Location Plan

KEY

Pipes

Beams

rev:	date:	note:	by:
P1	13.11.06	changed status to read 'For Planning'	

STATUS
For Planning

CONTRACTOR
n/a

PROJECT
Primrose Hill Primary School

CLIENT
LB Camden
Education Department

DRAWING TITLE
First Floor
Existing

DATE 26/07/06
SCALE 1:50@A1/1:100@A3
DRAWN HW
CHECKED
DRAWING No 10875_11_04
REVISION P1

SPRUNT The Quadrangle, 2nd FL, 180 Wardour Street, London W1F 8FY
T +44 (0)20 7287 1153 F +44 (0)20 7287 3675
www.sprunt.net

DO NOT SCALE DIMENSIONS OFF THIS DRAWING
CHECK ALL DIMENSIONS ON SITE BEFORE FABRICATION
REPORT ALL ERRORS OR OMISSIONS TO SPRUNT LIMITED
THIS DRAWING IS PROTECTED UNDER COPYRIGHT AND
SHALL NOT BE REPRODUCED IN PART OR WHOLE WITHOUT
PRIOR EXPRESSED PERMISSION OF SPRUNT LIMITED

REV	BY	DATE	DESCRIPTION
P2	HW	24/10/06	Scheme revised for new Planning application

STATUS
For Planning

CONTRACTOR
n/a

PROJECT
Primrose Hill School

CLIENT
LB Camden
Education Department

DRAWING TITLE
Existing Street Elevation

DATE
19/06/2006

SCALE
1:50 @ A1

DRAWN
FO

CHECKED
IG

DRAWING No
10875_30_06

REVISION
P2

RECEIVED 22 JAN 2007

sprunt.

Existing Street Elevation

SPRUNT The Quadrangle, 2nd FL, 180 Wardour Street, London W1F 8FY
T +44 (0)20 7287 1153 F +44 (0)20 7287 3675
www.sprunt.net

DO NOT SCALE DIMENSIONS OFF THIS DRAWING
CHECK ALL DIMENSIONS ON SITE BEFORE FABRICATION
REPORT ALL ERRORS OR OMISSIONS TO SPRUNT LIMITED
THIS DRAWING IS PROTECTED UNDER COPYRIGHT AND
SHALL NOT BE REPRODUCED IN PART OR WHOLE WITHOUT
PRIOR EXPRESSED PERMISSION OF SPRUNT LIMITED

22 JAN 2007

Existing Front Elevation

REV	BY	DATE	DESCRIPTION
P2	HW	24/10/06	Scheme revised for new Planning application

STATUS
For Planning

CONTRACTOR
n/a

PROJECT
Primrose Hill School

CLIENT
LB Camden
Education Department

DRAWING TITLE
Existing Front Elevation

DATE
19/06/2006

SCALE
1 : 50 @ A1

DRAWN
HW

CHECKED
IG

DRAWING No
10875_30_08

REVISION
P2

sprunt.

SPRUNT The Quadrangle, 2nd FL, 180 Wardour Street, London W1F 8FY
T +44 (0)20 7287 1153 F +44 (0)20 7287 3675
www.sprunt.net

DO NOT SCALE DIMENSIONS OFF THIS DRAWING
CHECK ALL DIMENSIONS ON SITE BEFORE FABRICATION
REPORT ALL ERRORS OR OMISSIONS TO SPRUNT LIMITED
THIS DRAWING IS PROTECTED UNDER COPYRIGHT AND
SHALL NOT BE REPRODUCED IN PART OR WHOLE WITHOUT
PRIOR EXPRESSED PERMISSION OF SPRUNT LIMITED

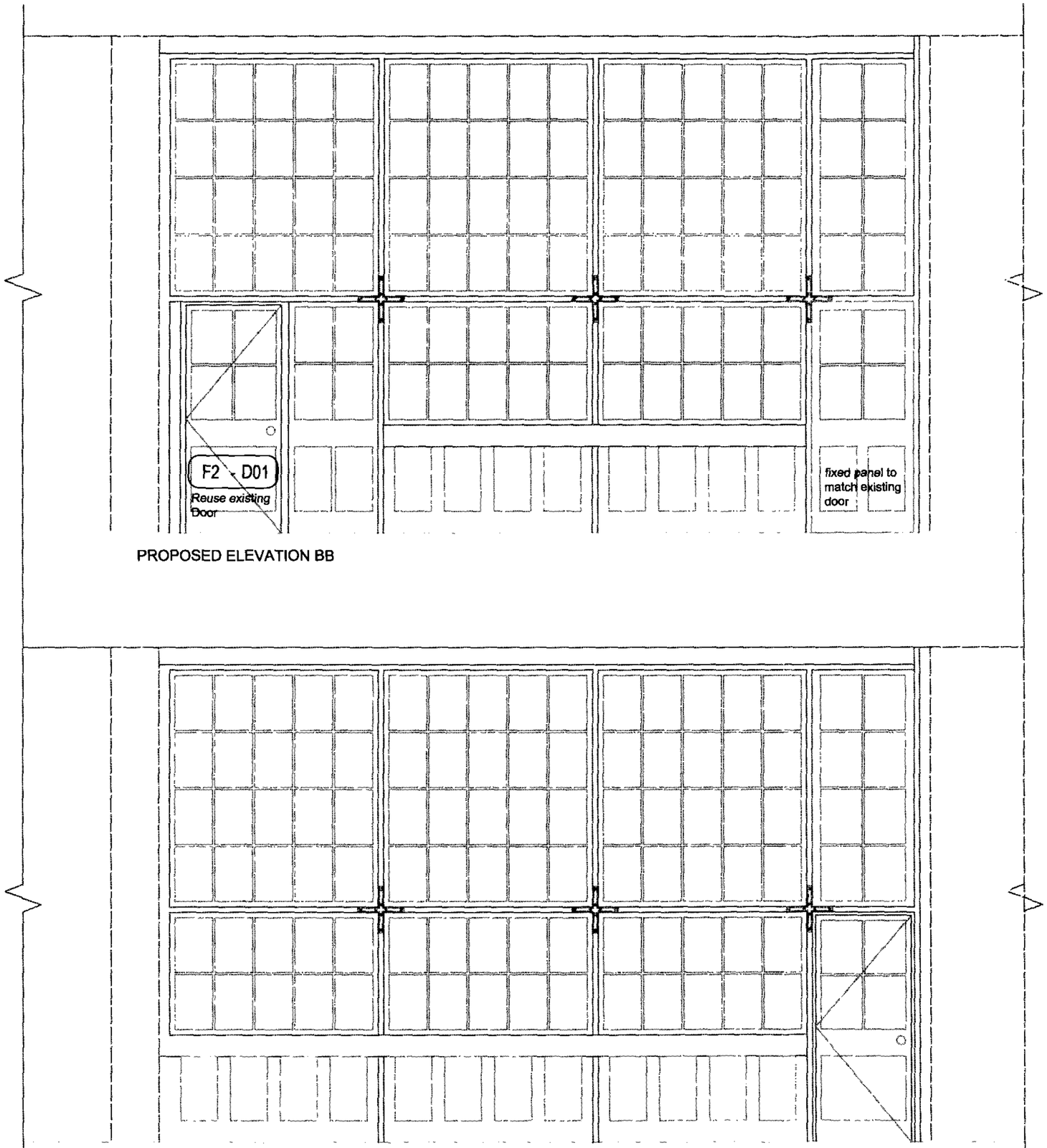

Location Plan
First Floor

RECEIVED
- 5 MAR

REV	BY	DATE	DESCRIPTION
P2	IB	26/02/07	Added Door No. and note about reuse of existing door
P1	HW	19/09/06	Drawing issued to Camden Planning for comment

STATUS
Planning

CONTRACTOR
n/a

PROJECT
Primrose Hill Primary School

CLIENT
LB Camden
Education Department

DRAWING TITLE
Elevation Of Glazed Screen
First Floor: Existing Kitchen

DATE
15/09/06

SCALE
1:20@A1, 1:40@A3

DRAWN
HW

CHECKED

DRAWING No
10875_40_02

REVISION
P2

sprunt.

SPRUNT The Quadrangle, 2nd Fl, 180 Wardour Street, London W1F 8FY
T +44 (0)20 7287 1153 F +44 (0)20 7287 3675
www.sprunt.net

DO NOT SCALE DIMENSIONS OFF THIS DRAWING
CHECK ALL DIMENSIONS ON SITE BEFORE FABRICATION
REPORT ALL ERRORS OR OMISSIONS TO SPRUNT LIMITED
THIS DRAWING IS PROTECTED UNDER COPYRIGHT AND
SHALL NOT BE REPRODUCED IN PART OR WHOLE WITHOUT
PRIOR EXPRESSED PERMISSION OF SPRUNT LIMITED

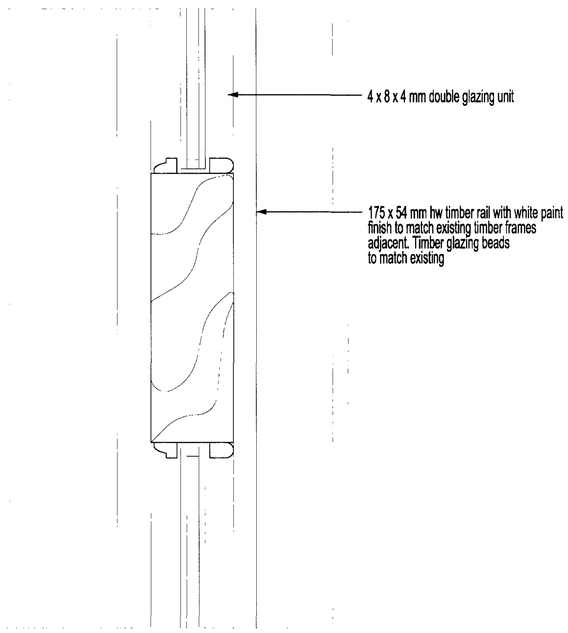

Detail CC door rail 1:2

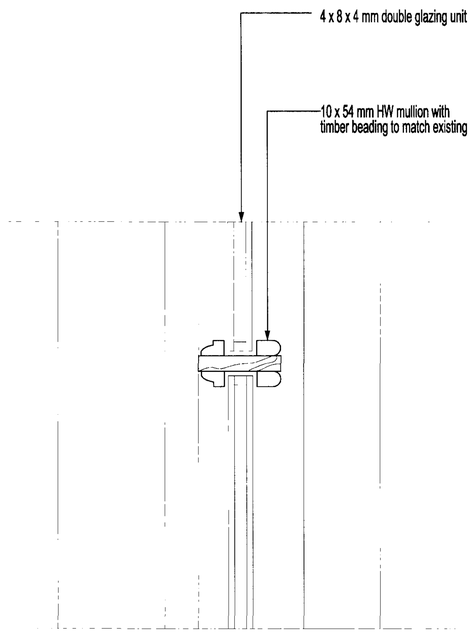

Detail BB door mullion 1:2

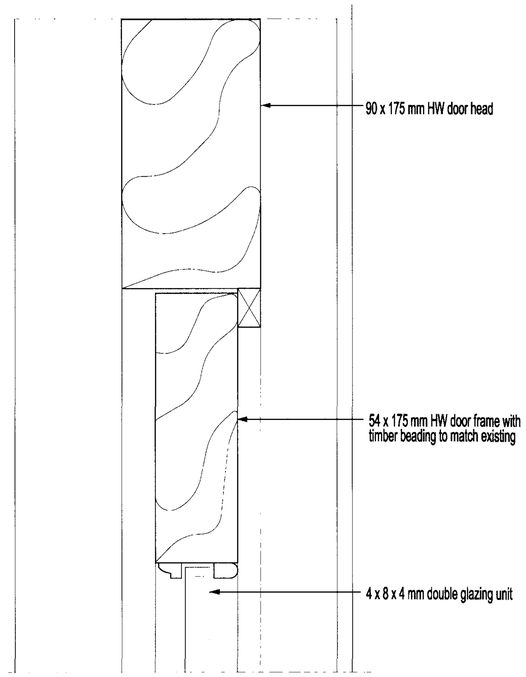

Detail AA door head 1:2

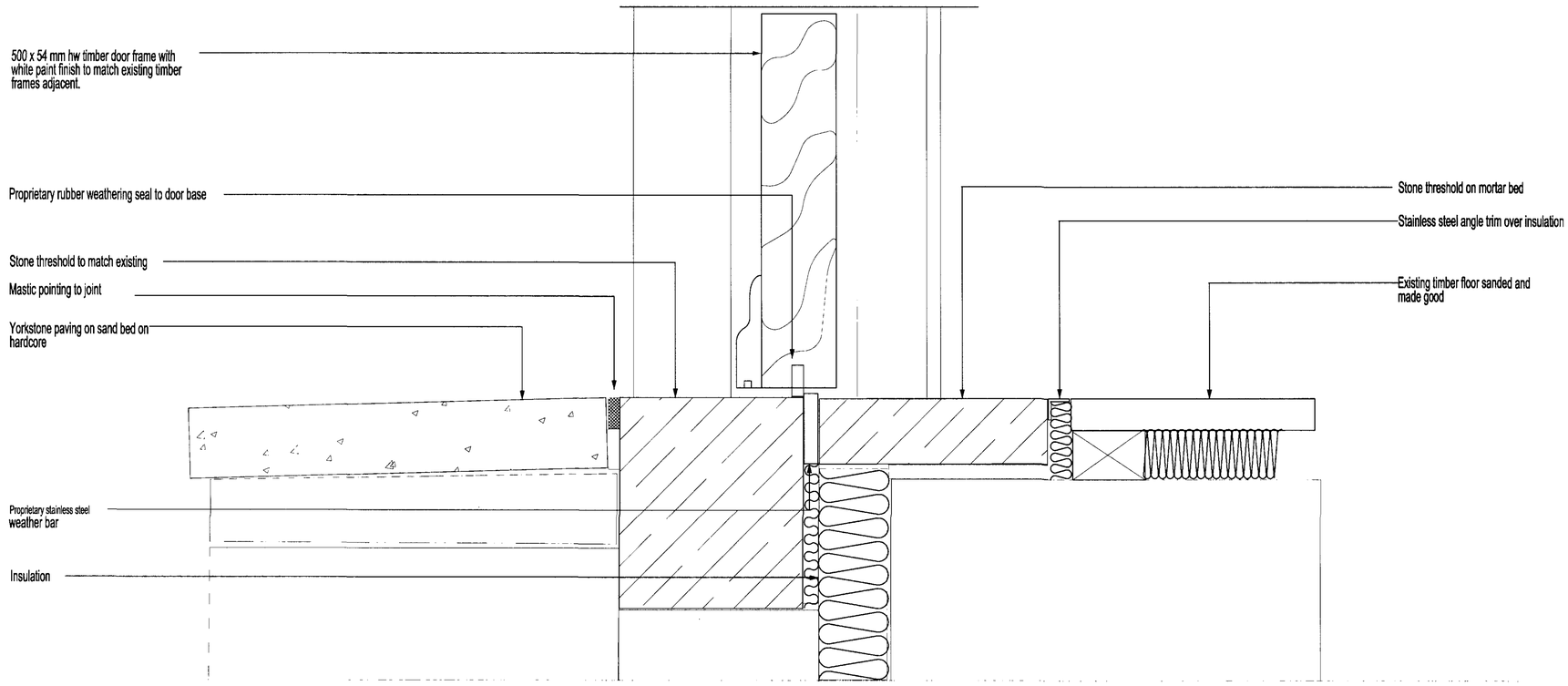

Detail DD door threshold 1:2

STATUS

CONTRACTOR

PROJECT

Primrose Hill Primary School

CLIENT

LB Camden
Children, Schools & Families Directorate

DRAWING TITLE

Details of Door G9.ED01

DATE 22.02.07	SCALE 1:2
DRAWN kl	CHECKED
DRAWING No 10875_40_60	REVISION

- 5 MAR 2

sprunt.

SPRUNT The Quadrangle, 2nd FL, 180 Wardour Street, London W1F 8FY
T +44 (0)20 7287 1153 F +44 (0)20 7287 3675
www.sprunt.net

DO NOT SCALE DIMENSIONS OFF THIS DRAWING
CHECK ALL DIMENSIONS ON SITE BEFORE FABRICATION
REPORT ALL ERRORS OR OMISSIONS TO SPRUNT LIMITED
THIS DRAWING IS PROTECTED UNDER COPYRIGHT AND
SHALL NOT BE REPRODUCED IN PART OR WHOLE WITHOUT
PRIOR EXPRESSED PERMISSION OF SPRUNT LIMITED

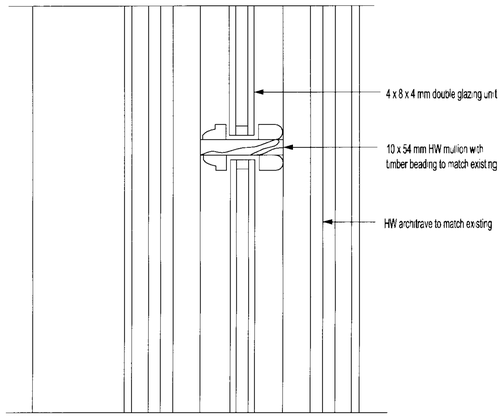

Detail CC DOOR MULLION 1:2

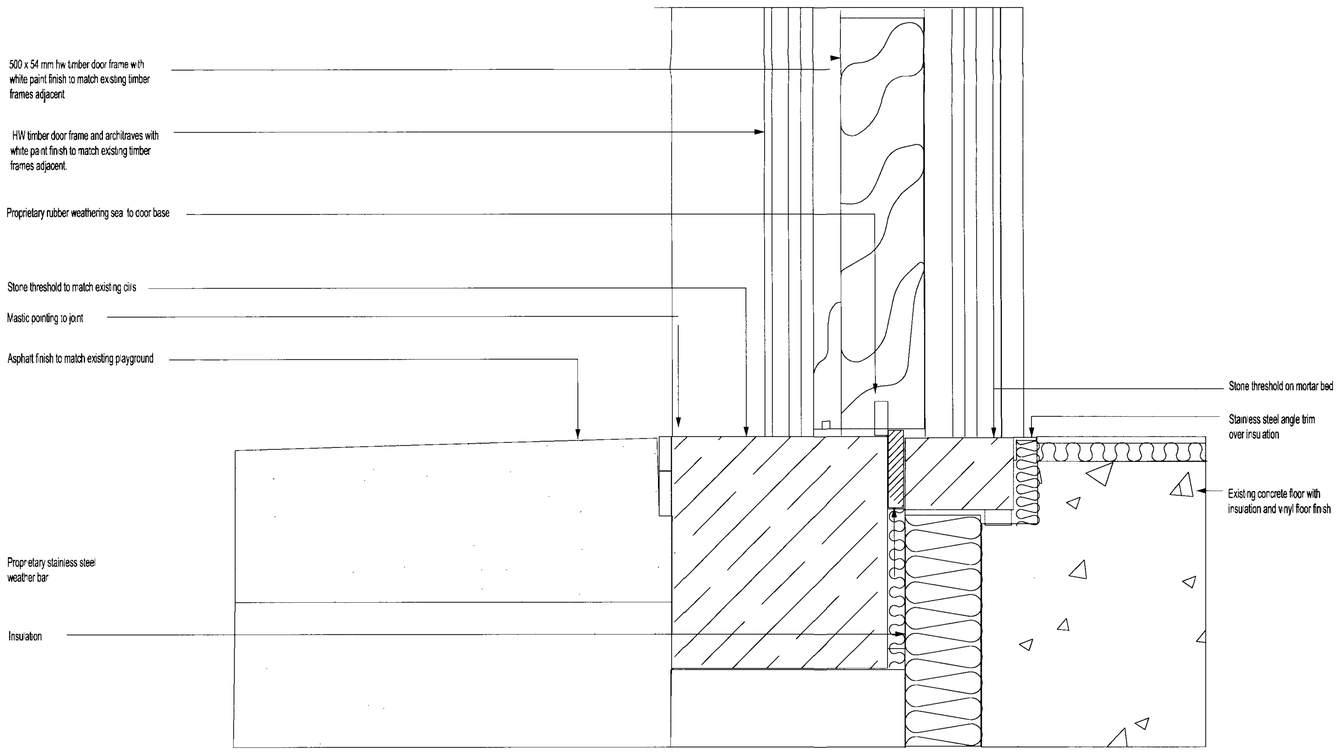

Detail DD DOOR THRESHOLD 1:2

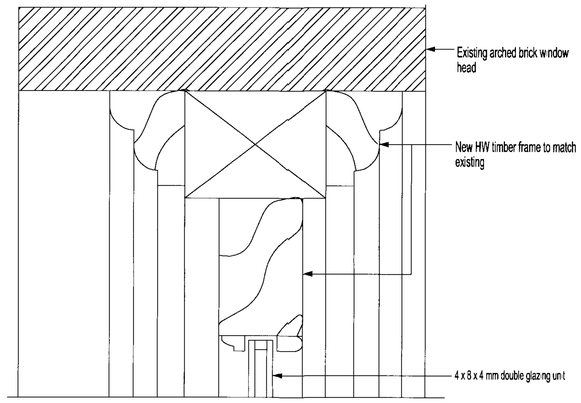

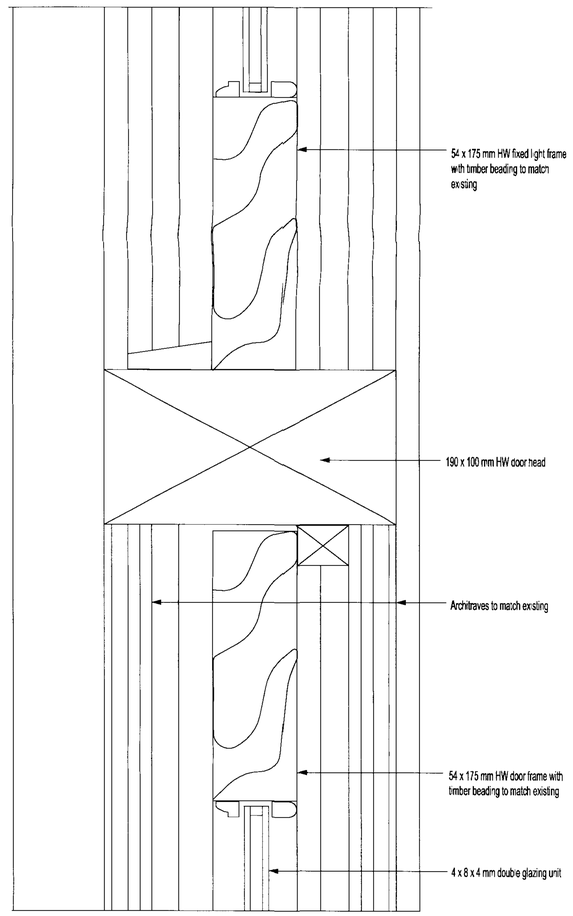

Detail AA & BB DOOR HEAD 1:2

STATUS
PLANNING

CONTRACTOR

PROJECT
Primrose Hill Primary School

CLIENT
L B Camden
Children, Schools & Families Directorate

DRAWING TITLE
Details of Door LG1.ED01
Reception Class

DATE	SCALE
22.02.07	1:50/1:2 @ A1
DRAWN	CHECKED
kl	
DRAWING No	REVISION
10875_40_62	

sprunt.

SPRUNT The Quadrangle, 2nd FL, 180 Wardour Street, London W1F 8FY
T +44 (0)20 7287 1153 F +44 (0)20 7287 3675
www.sprunt.net

DO NOT SCALE DIMENSIONS OFF THIS DRAWING
CHECK ALL DIMENSIONS ON SITE BEFORE FABRICATION
REPORT ALL ERRORS OR OMISSIONS TO SPRUNT LIMITED
THIS DRAWING IS PROTECTED UNDER COPYRIGHT AND
SHALL NOT BE REPRODUCED IN PART OR WHOLE WITHOUT
PRIOR EXPRESSED PERMISSION OF SPRUNT LIMITED

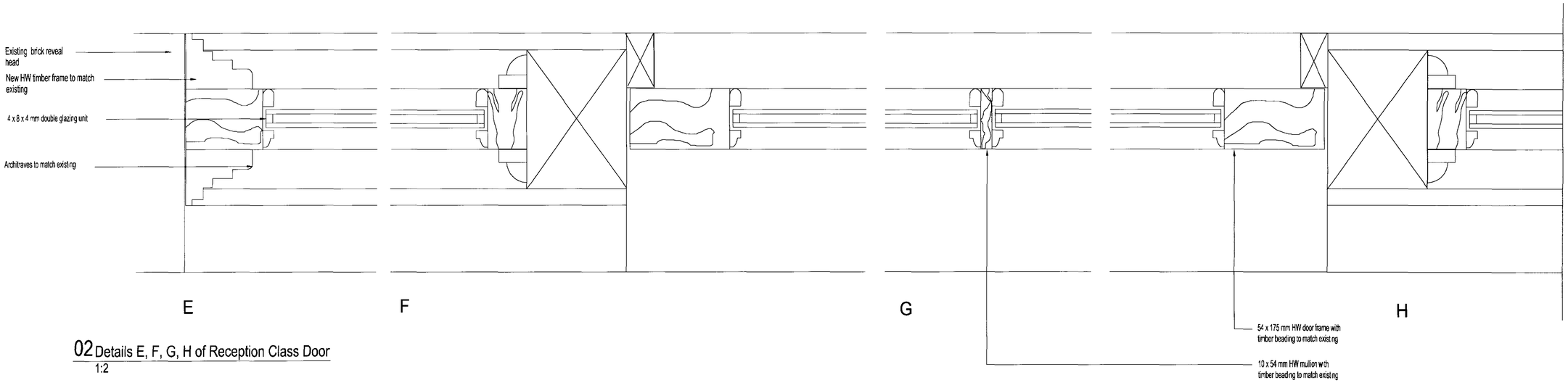

02 Details E, F, G, H of Reception Class Door
1:2

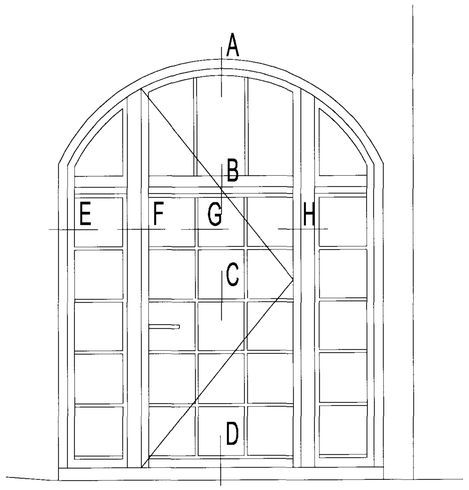

01 Elevation of Reception Class Door
1:20

- 5 MAY

STATUS
PLANNING

CONTRACTOR

PROJECT
Primrose Hill Primary School

CLIENT
L B Camden
Children, Schools & Families Directorate

DRAWING TITLE
Details of Door LG1.ED01
Reception Class

DATE	SCALE
22.02.07	1:20/1:2 @ A1
DRAWN	CHECKED
kl	
DRAWING No	REVISION
10875_40_63	

sprunt.

SPRUNT The Quadrangle, 2nd FL, 180 Wardour Street, London W1F 8FY
T +44 (0)20 7287 1153 F +44 (0)20 7287 3675
www.sprunt.net