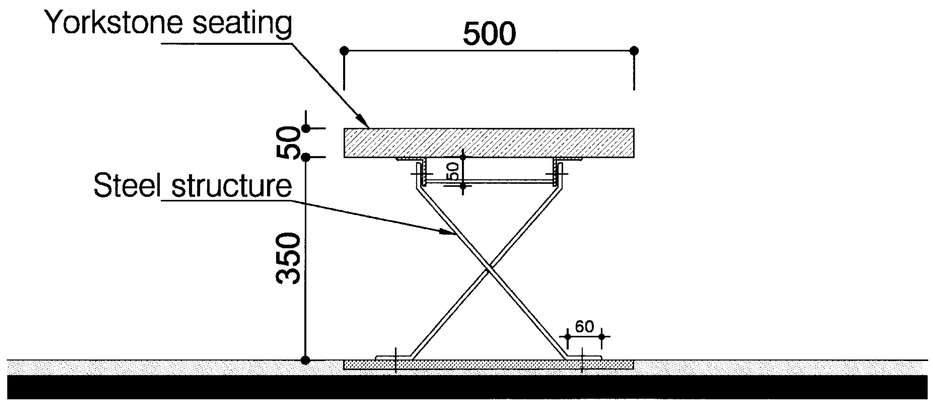

section

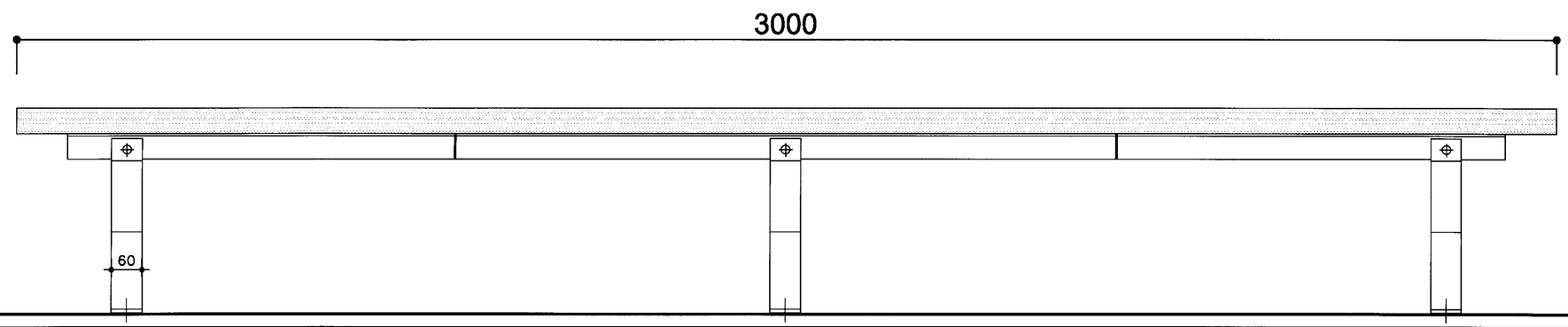

elevation

INDEX	MODIFY	DATE
01		16 03 2007

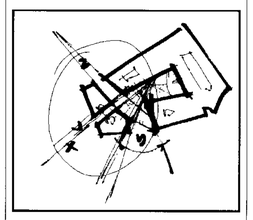

Saint Giles Court London

APPLICANT

LEGAL & GENERAL ASSURANCE SOCIETY LTD.
Bucklersbury House, 3 Queen Victoria Street
London EC4N 8NH
tel: +44 (0)20 7528 6500 fax: +44 (0)20 7528 6848

DEVELOPER

STANHOPE PLC
Norfolk House, 31 St James Square London SW1Y 4JJ
tel: +44 (0)20 7170 1700 fax: +44 (0)20 7170 1701
e-mail: mail@stanhope.plc.uk

ARCHITECTS

RENZO PIANO BUILDING WORKSHOP
34, rue des Archives 75004 Paris
tel: +33 (0)1.44.61.49.00 fax: +33 (0)1.42.78.01.98

fletcher priest architects
london + köln
Middlesex House, 34/42 Cleveland St, London W1T 4JE
tel: +44 (0)20 7034 2200 fax: +44 (0)20 7837 5347
internet: www.fletcherpriest.com

ENGINEERING CONSULTANT

OVE ARUP & PARTNERS
13 Fitzroy Street London W1P 9HD
tel: +44 (0)20 7636 1531 fax: +44 (0)20 7580 3924
e-mail: www.arup.com

STAGE D

SENDER
RPBW

TITLE
BENCH

DATE	SCALE
16 03 2007	1/5@A1

DRAWN BY | CHECKED BY

PLAN N°	REVISION
RP-BM-SC-SK-017	-