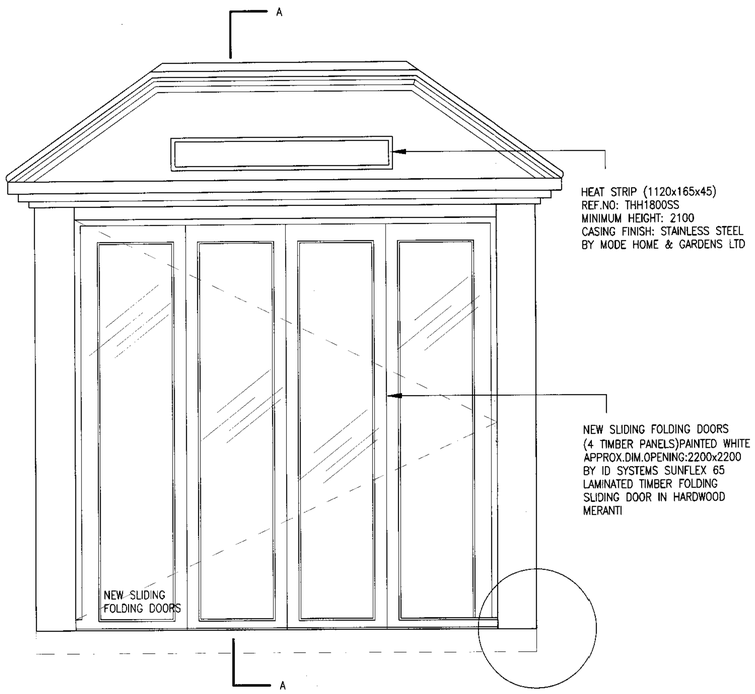


ELEVATION BALCONY AS PROPOSED

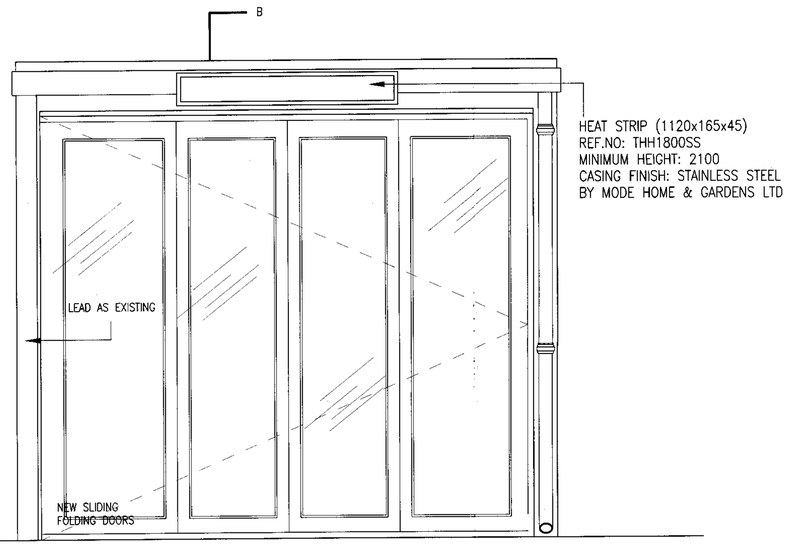


ELEVATION TERRACE AS PROPOSED

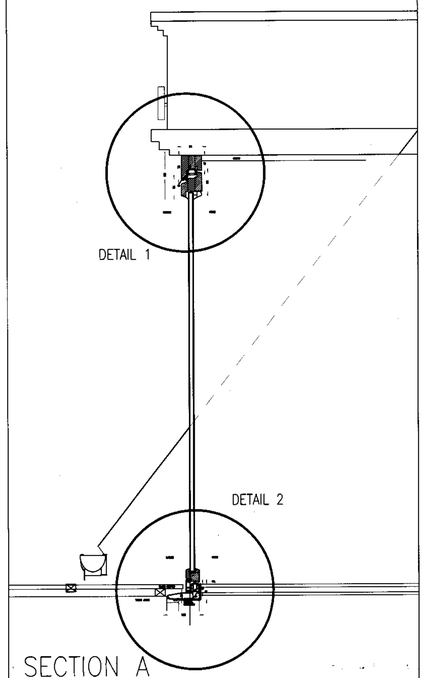


SECTION A

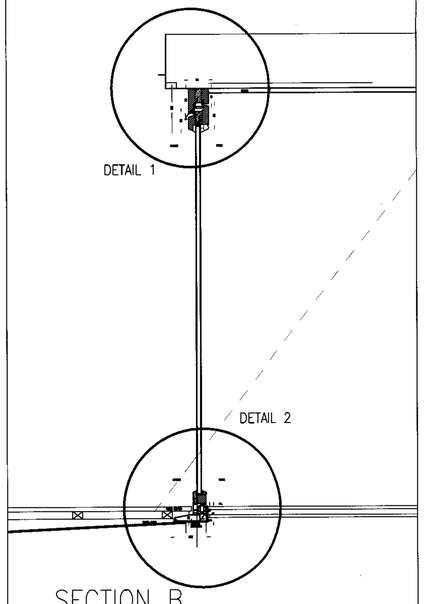


SECTION B

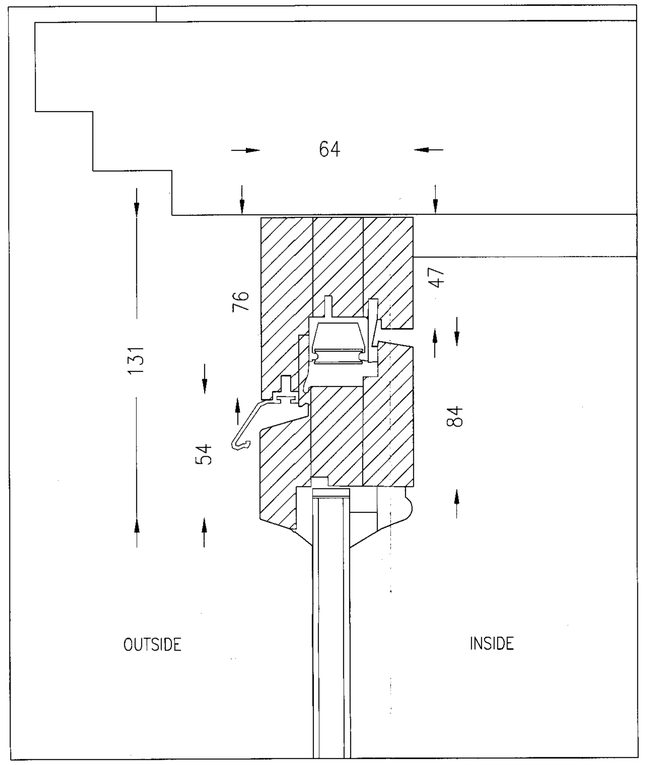


DETAIL 1

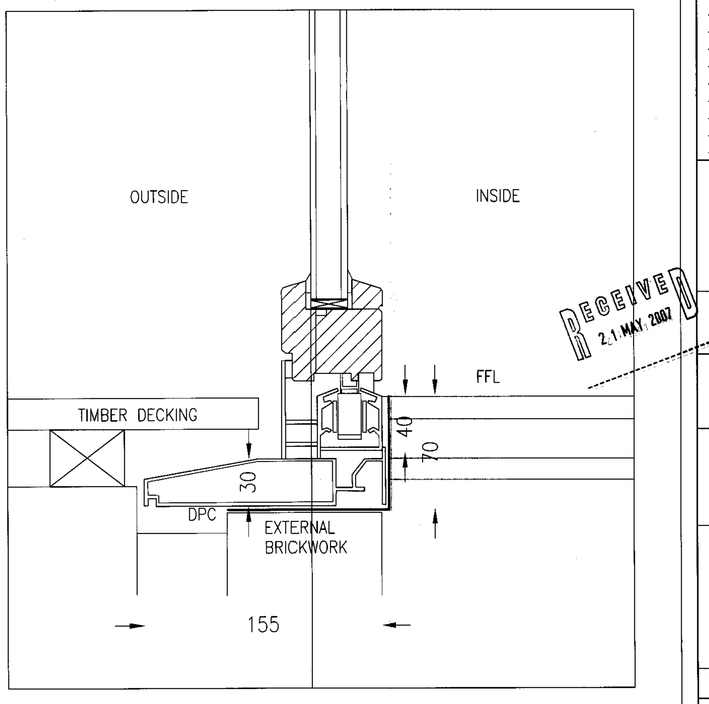


DETAIL 2

No scaled dimensions to be taken from this drawing. All dimensions to be site checked.

- Key Switch
- 24hr Switched Socket
- High level switched socket outlet
- Twin switched socket outlet
- Switchable fused spur
- Un-switchable fused spur
- Co-Axial cable link
- BT / Fax Point
- Light switch
- Pull cord light switch
- Fire Exit sign 75mm letters
- Fire Exit sign 125mm letters
- Emergency light
- Distribution Board
- Air Conditioning Control Panel
- Security Alarm Panel
- Security Alarm Keypad
- Fire Alarm Control Panel
- Wall Mounted Light
- Existing Partitions
- New Metal Stud Partitions
- Call Point
- Smoke Detector
- Heat Detector
- Relay
- Detector/Sounder
- Beacon

CONTRACT DOCUMENT

The Employer

The Contractor

Witness Date

AREA SCHEDULE

Ground Floor

First Floor

Total

Revisions

| No. | Note | Date |
|---|---|---|
| | | |


Maslen Brennan Henshaw
PARTNERSHIP
Surveyors, Architects and Engineers
88 Church Lane, London N2 0RB
Tel: +44 (0)20 8444 0049 Fax: +44 (0)20 8883 5453
Unit 207 Bradford Court Business Centre
123/131 Bradford Street Birmingham B12 0NS
Tel: +44 (0)121 603 3320 Fax: +44 (0)121 246 9076
Email: enquiries@maslen-brennan.co.uk Web: www.maslen-brennan.co.uk


RECEIVED 21 MAY 2007

Client:
NIRI SHAN

Site:
13 WEDDERBURN ROAD
NW3 5QS HAMPSTEAD LONDON

Drawing Title:
ELEVATIONS/SECTIONS
DORMER AS PROPOSED

Scale: 1:2 / 1:15

Date: MARCH 2007

Drg. No. 6475-122

Rev. #