THIS DRAWING AND CAD DATA THEREIN IS PROTECTED BY COPYRIGHT
AND MUST NOT BE COPIED OR REPRODUCED
WITHOUT THE WRITTEN CONSENT OF
DLG ARCHITECTS
©
NO DIMENSIONS ARE TO BE SCALED FROM THIS DRAWING.
USE FIGURED DIMENSIONS ONLY.
ALL DIMENSIONS AND SIZES ARE TO BE CHECKED ON SITE
AND ANY DISCREPANCIES REPORTED TO THE ARCHITECT
PRIOR TO INITIATION OF ANY WORKS.

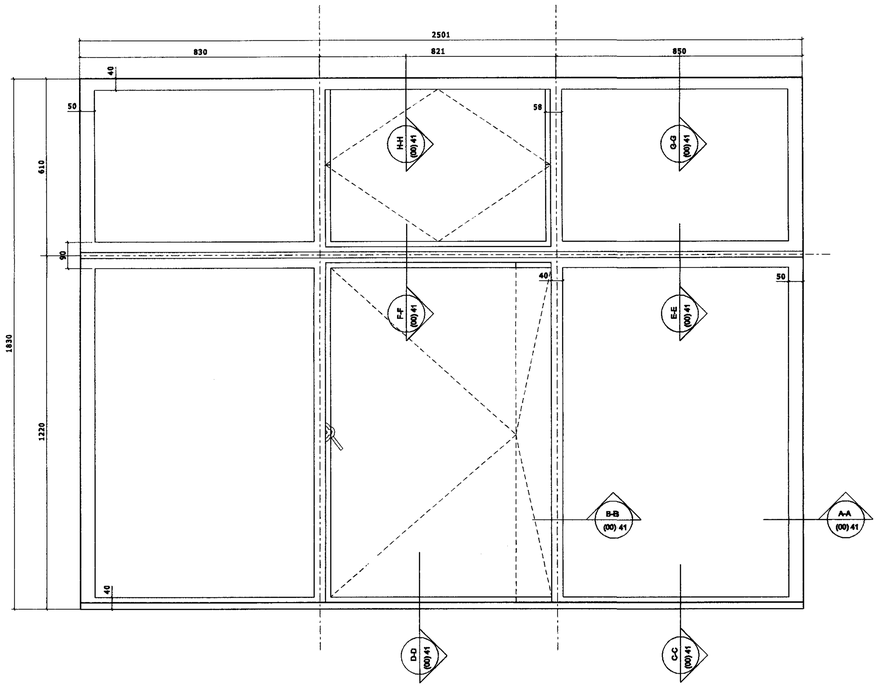

Typical Existing Window
External Elevation
Esc. 1:10

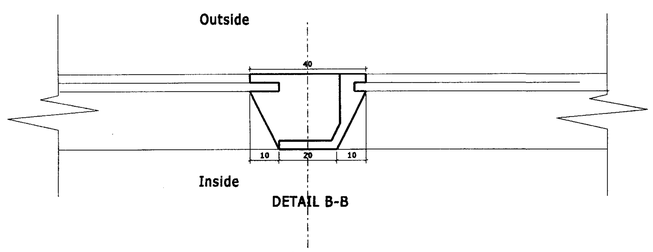

DETAIL B-B

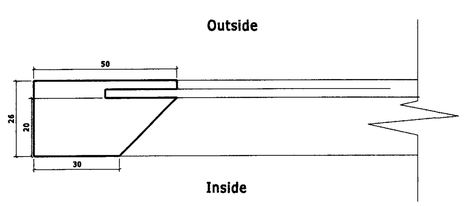

DETAIL A-A

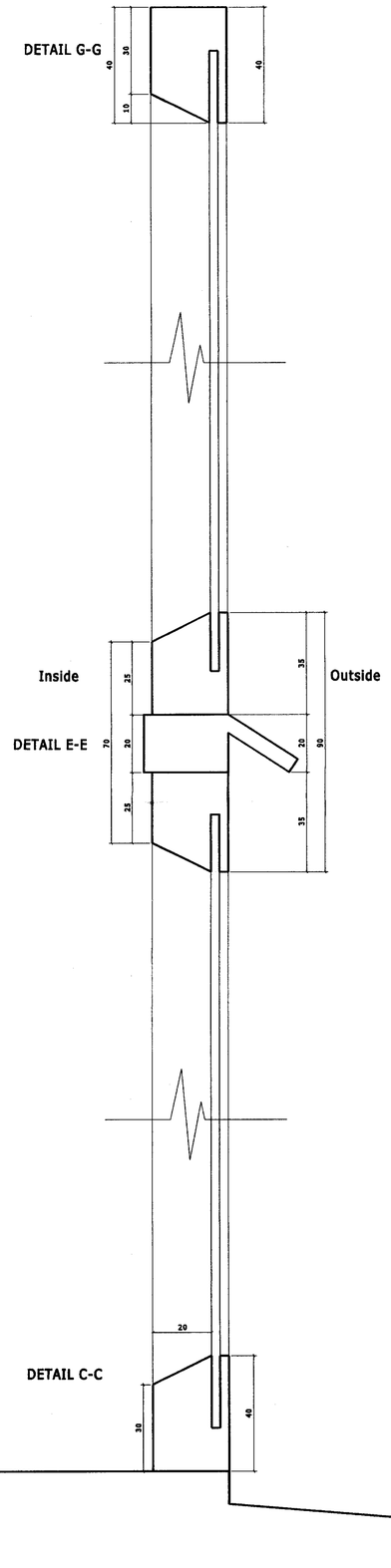

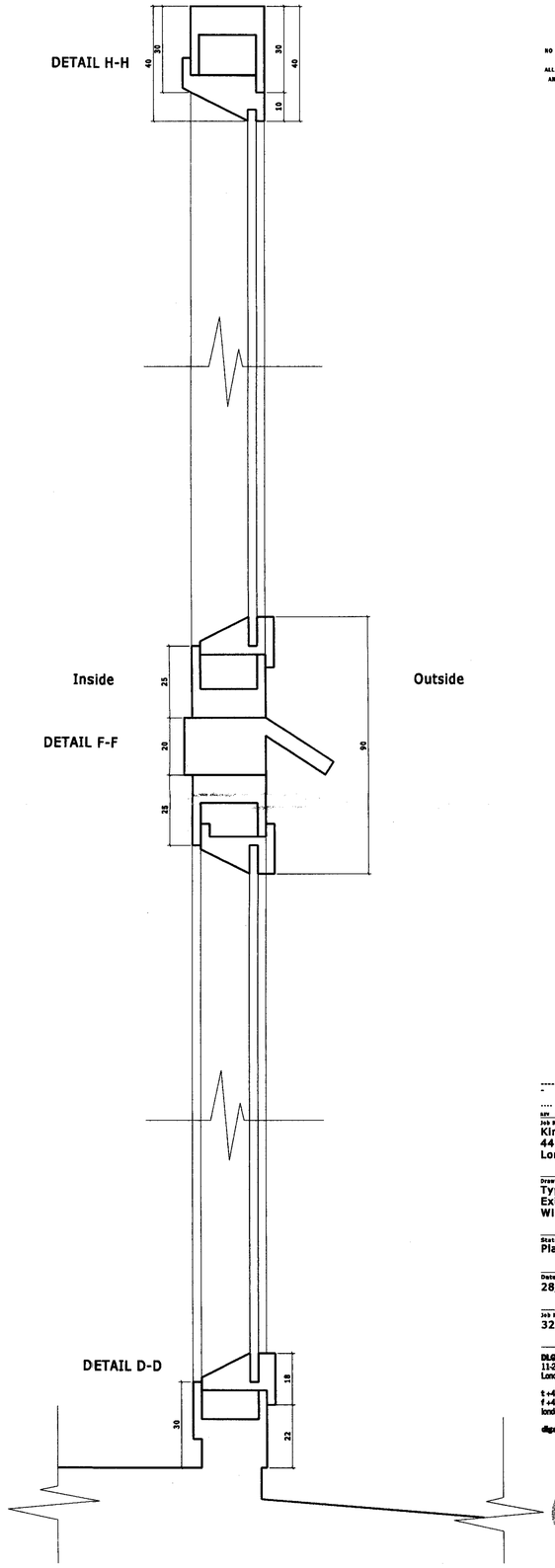

REV	DESCRIPTION	INITIALS/ DATE
-	Planning Issue	18/07/07
....		

Job Name
Kinetic House Ltd
44 Hatton Garden
London, EC1N

Drawing Title
Typical
Existing
Window

Status
Planning

Date	Sheet By	Scale @ Size
28/6/07	A.S.	1:10 & 1:1@A1

Job Number	Code	Drawing Number	Rev
3260		(00) 41	-

DLG Architects
11-29 Fashion Street
London E1 6PZ

t +44(0)20 7426 3630
f +44(0)20 7426 3631
london@dlgarchitects.com

dlgarchitects.com

dlg architects

THIS DRAWING AND CAD DATA THEREIN IS PROTECTED BY COPYRIGHT
AND MUST NOT BE COPIED OR REPRODUCED
WITHOUT THE WRITTEN CONSENT OF
DLG ARCHITECTS
©

NO DIMENSIONS ARE TO BE SCALED FROM THIS DRAWING.
USE FIGURED DIMENSIONS ONLY.
ALL DIMENSIONS AND SIZES ARE TO BE CHECKED ON SITE AND ANY DISCREPANCIES REPORTED TO THE ARCHITECT PRIOR TO INITIATION OF ANY WORKS.

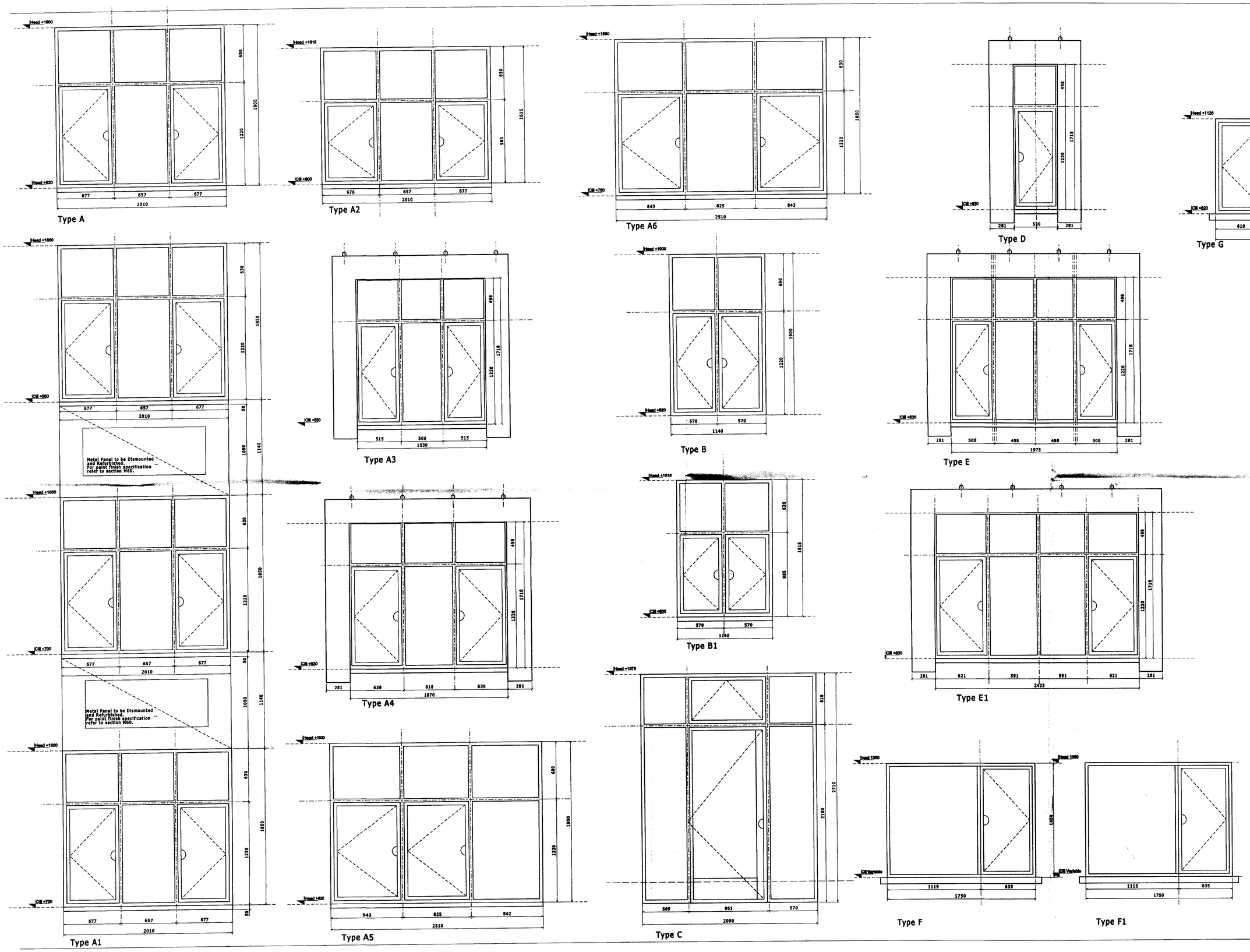

-	Planning Issue	18/07/07

REV DESCRIPTION INITIALS/ DATE

Job Name
Kinetic House Ltd
44 Hatton Garden
London, EC1N

Drawing Title
General Proposed
Elevations
Windows

Status
Planning

Date	Sheet By	Scale @ Size
28/6/07	A.S.	1:20@A1

Job Number	Code	Drawing Number	Rev
3260		(99) 40	-

DLG Architects
11-29 Fashion Street
London E1 6PZ

t +44(0)20 7426 3630
f +44(0)20 7426 3631
london@dlgarchitects.com

dlgarchitects.com

dlg architects

THIS DRAWING AND CAD DATA THEREIN IS PROTECTED BY COPYRIGHT
AND MUST NOT BE COPIED OR REPRODUCED
WITHOUT THE WRITTEN CONSENT OF
DLG ARCHITECTS
©
NO DIMENSIONS ARE TO BE SCALED FROM THIS DRAWING.
USE FIGURED DIMENSIONS ONLY.
ALL DIMENSIONS AND SIZES ARE TO BE CHECKED ON SITE
AND ANY DISCREPANCIES REPORTED TO THE ARCHITECT
PRIOR TO INITIATION OF ANY WORKS.

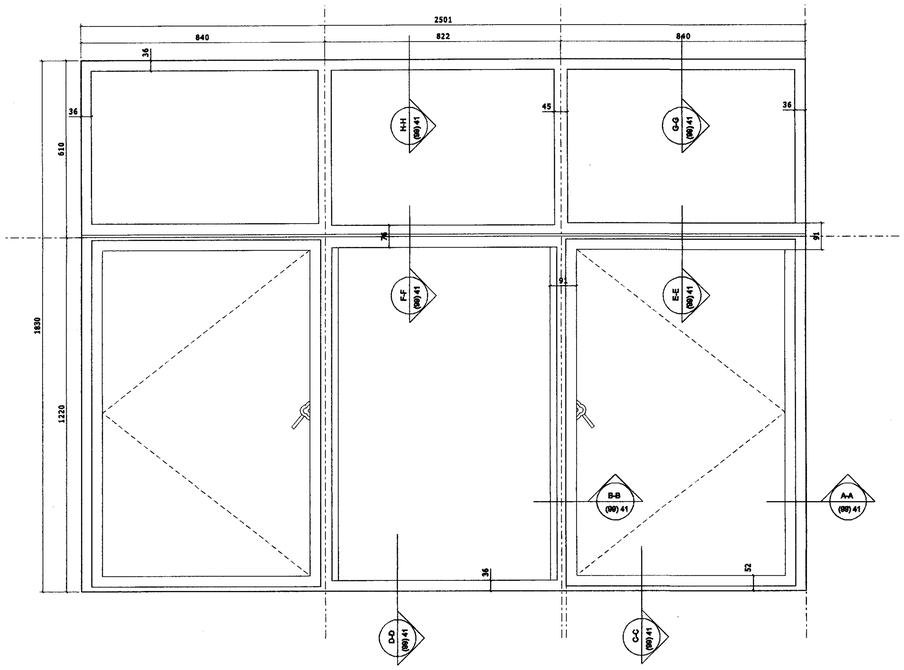

Typical Proposed Window
External Elevation
Esc. 1:10

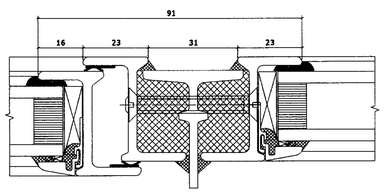

DETAIL B-B

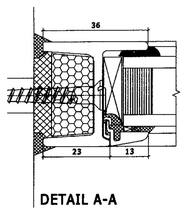

DETAIL A-A

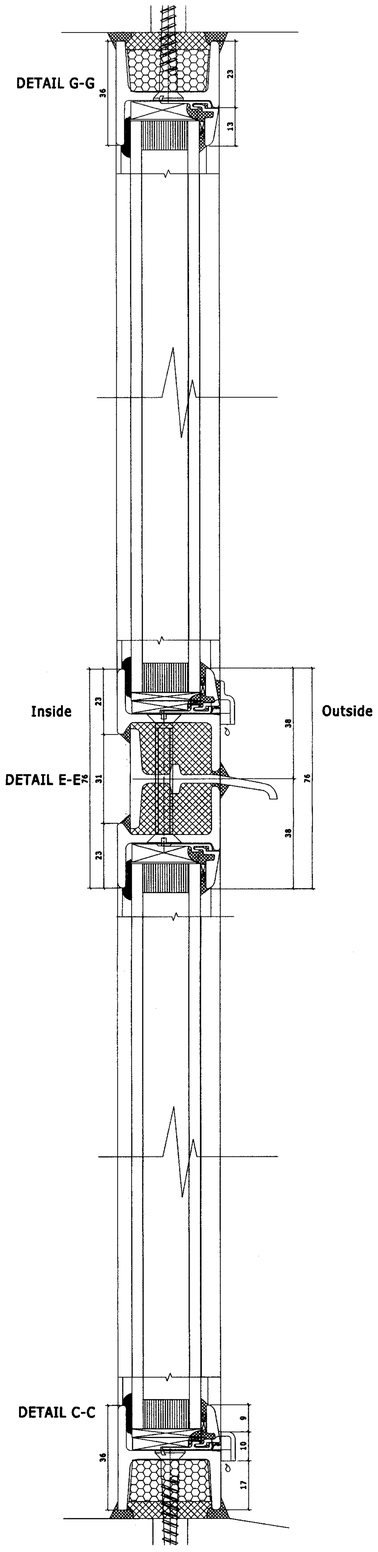

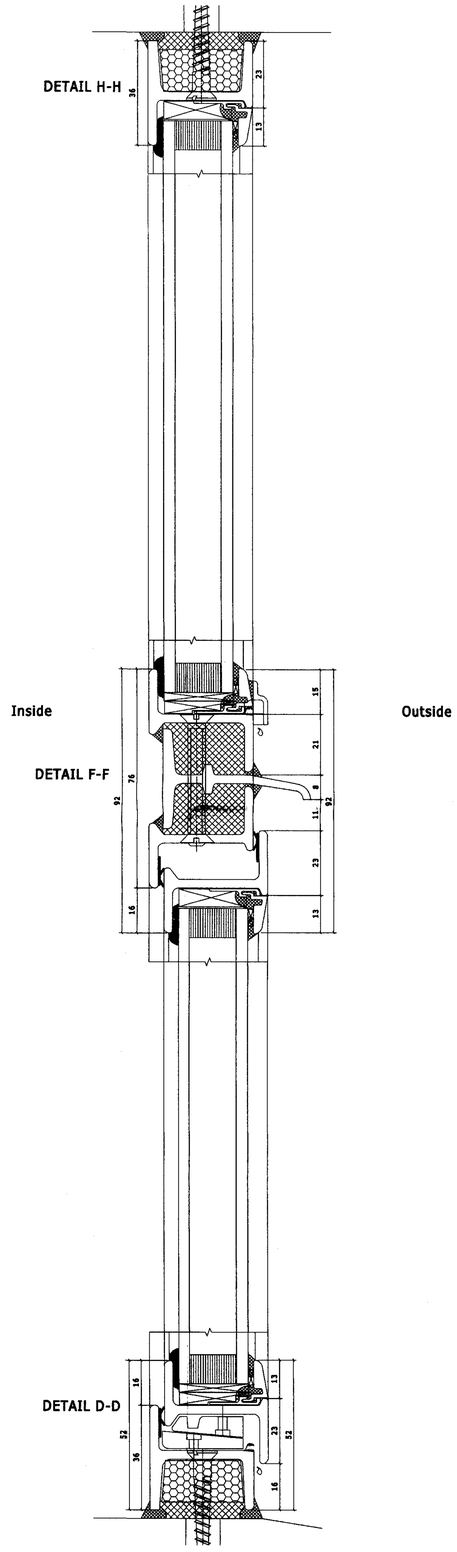

REV	DESCRIPTION	INITIALS/ DATE
-	Planning Issue	18/07/07
....		

Job Name
Kinetic House Ltd
44 Hatton Garden
London, EC1N

Drawing Title
Typical
Proposed
Window

Status
Planning

Date	Sheet By	Scale @ Size
28/6/07	A.S.	1:10 & 1:1@A1

Job Number	Code	Drawing Number	Rev
3260		(99) 41	-

DLG Architects
11-29 Fashion Street
London E1 6PZ

t +44(0)20 7426 3630
f +44(0)20 7426 3631
london@dlgarchitects.com

dlgarchitects.com

dlg architects

North Elevation to the Rear

KEY

Door Nos. are circular

Window Nos. are hexagon

Room Nos. are rectangular

The Room, Door and Window Numbering system is as follows.

	Type	Floor	Existing (E) Proposed (P)	Item No.
Doors	D	1	E	22
Windows	W	2	E	17
Rooms	R	B	E	01

Floor Codes
B - Basement
0 - Ground
1 - First
2 - Second
3 - Third
4 - Fourth
5 - Fifth
6 - Sixth
7 - Seventh

THIS DRAWING AND CAD DATA THEREIN IS PROTECTED BY COPYRIGHT AND MUST NOT BE COPIED OR REPRODUCED WITHOUT THE WRITTEN CONSENT OF DLG ARCHITECTS ©

NO DIMENSIONS ARE TO BE SCALED FROM THIS DRAWING. USE FIGURED DIMENSIONS ONLY.
ALL DIMENSIONS AND SIZES ARE TO BE CHECKED ON SITE AND ANY DISCREPANCIES REPORTED TO THE ARCHITECT PRIOR TO INITIATION OF ANY WORKS.

Rev	Description	Initials/ Date
C	Planning Issue	18/07/07

Job Name
Kinetic House Ltd
44 Hatton Garden
London, EC1N

Drawing Title
North Elevation
Elevation
Proposed

Status
Planning

Date	Sheet By	Scale @ Size
21/6/07	JMH	1:50@A1

Job Number	Code	Drawing Number	Rev
3260		(99) 12	C

DLG Architects
11-29 Fashion Street
London E1 6PZ
t +44(0)20 7426 3630
f +44(0)20 7426 3631
london@dlgarchitects.com
dlgarchitects.com

dlg architects

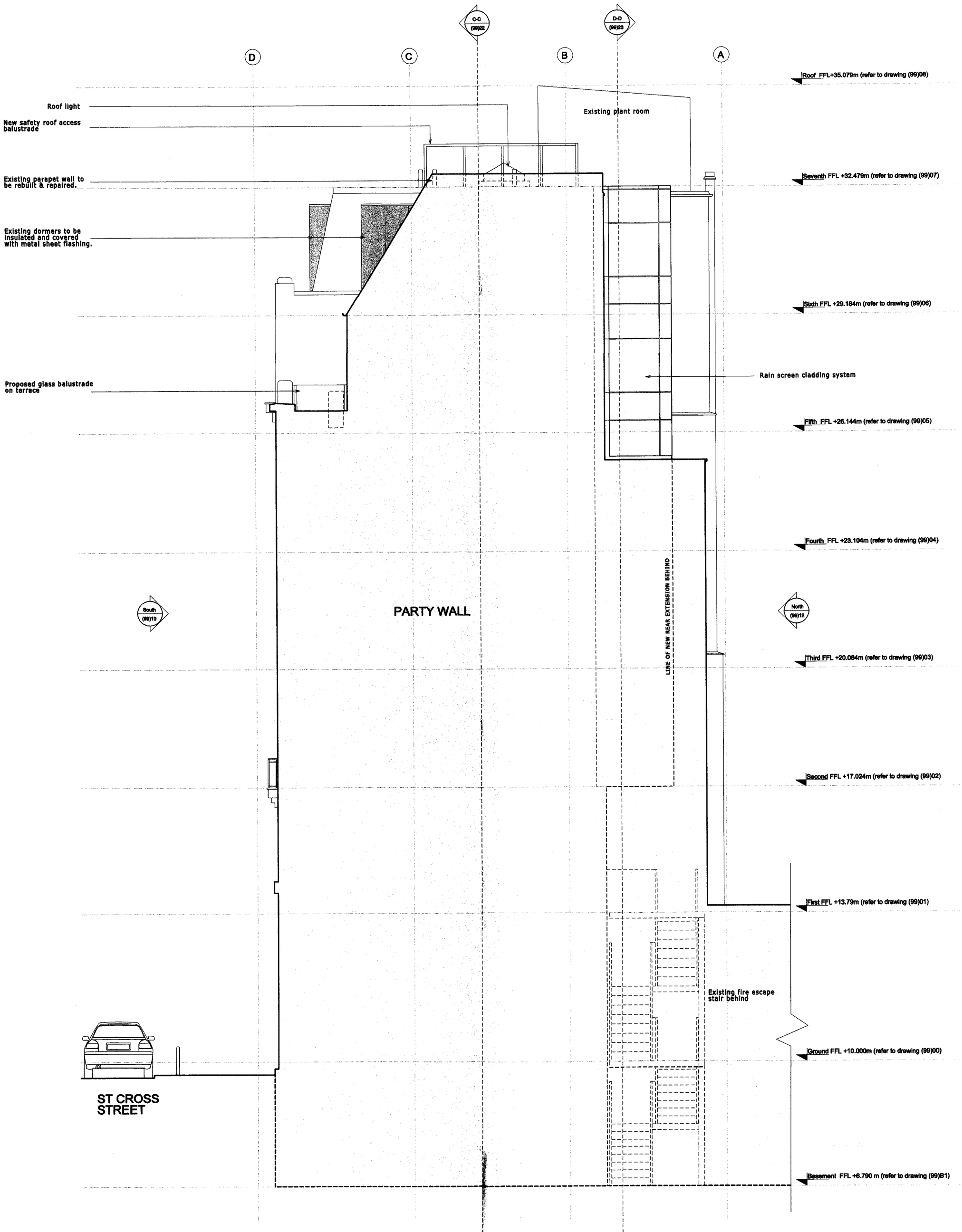

KEY

D1/22 Door Nos. are circular

W2/17 Window Nos. are hexagon

R3/01 Room Nos. are rectangular

The Room, Door and Window Numbering system is as follows.

	Type	Floor	Existing (E) Proposed (P)	Item No.
Doors	D	1	E	22
Windows	W	2	E	17
Rooms	R	B	E	01

Floor Codes
B - Basement
0 - Ground
1 - First
2 - Second
3 - Third
4 - Fourth
5 - Fifth
6 - Sixth
7 - Seventh

THIS DRAWING AND CAD DATA THEREIN IS PROTECTED BY COPYRIGHT AND MUST NOT BE COPIED OR REPRODUCED WITHOUT THE WRITTEN CONSENT OF DLG ARCHITECTS ©

NO DIMENSIONS ARE TO BE SCALED FROM THIS DRAWING. USE FIGURED DIMENSIONS ONLY. ALL DIMENSIONS AND SIZES ARE TO BE CHECKED ON SITE AND ANY DISCREPANCIES REPORTED TO THE ARCHITECT PRIOR TO INITIATION OF ANY WORKS.

REV	DESCRIPTION	INITIALS	DATE
B	Planning Issue		18/07/07

Job Name
Kinetic House Ltd
44 Hatton Garden
London, EC1N

Drawing Title
East Elevation
Elevation
Proposed

Status
Planning

Date	Sheet By	Scale @ Size
21/6/07	JMH	1:50@A1

Job Number	Code	Drawing Number	Rev
3260	(99)	13	B

DLG Architects
11-29 Fashion Street
London E1 6PZ

t:+44(0)20 7426 3630
f:+44(0)20 7426 3631
london@dlgarchitects.com
dlgarchitects.com

dlg architects

East Elevation to the Rear