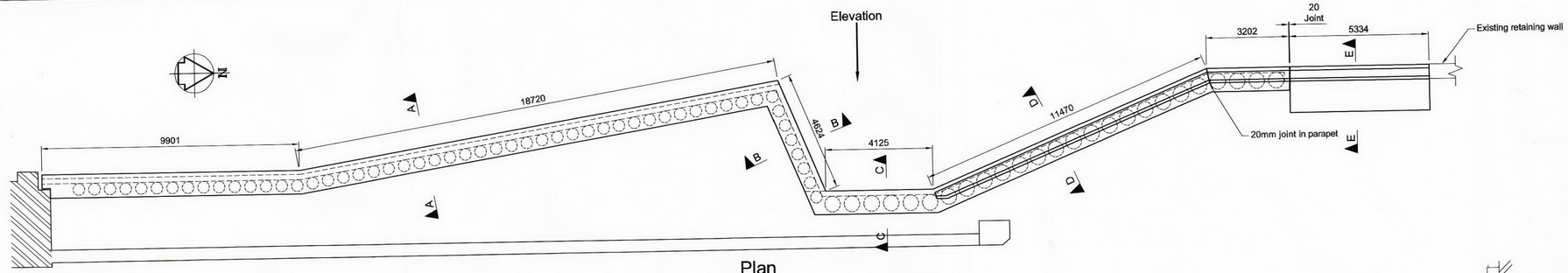

Plan
Scale 1:100

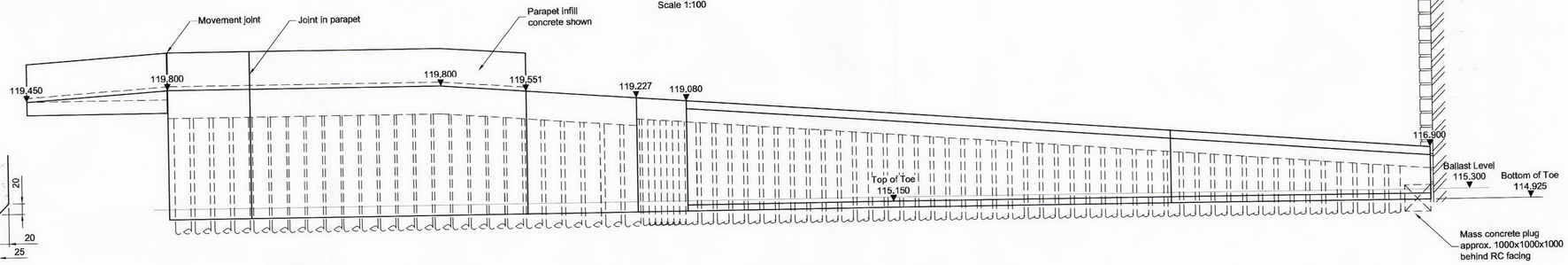

Elevation on Retaining Wall and Capping Beam
Scale 1:100

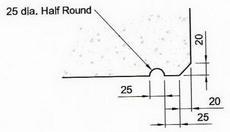

Drip Detail
Scale 1:5

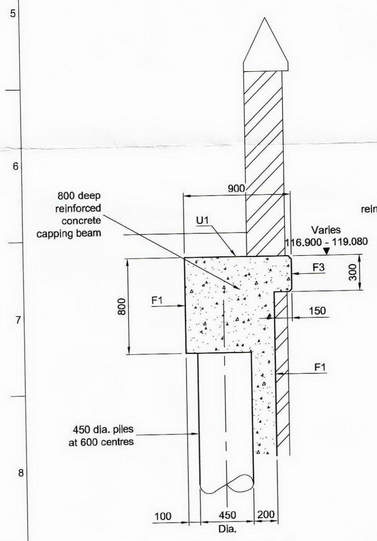

Section A-A
Scale 1:25

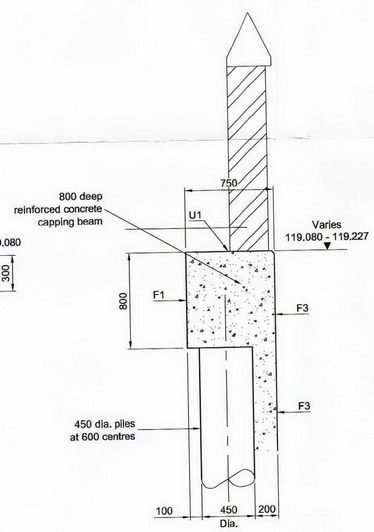

Section B-B
Scale 1:25

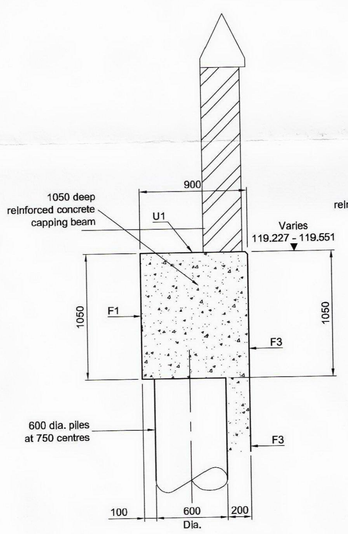

Section C-C
Scale 1:25

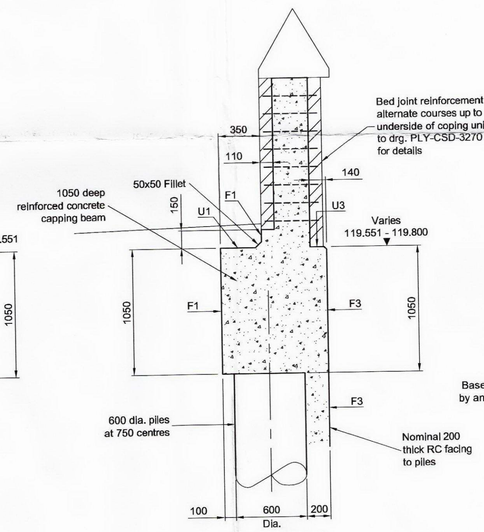

Section D-D
Scale 1:25

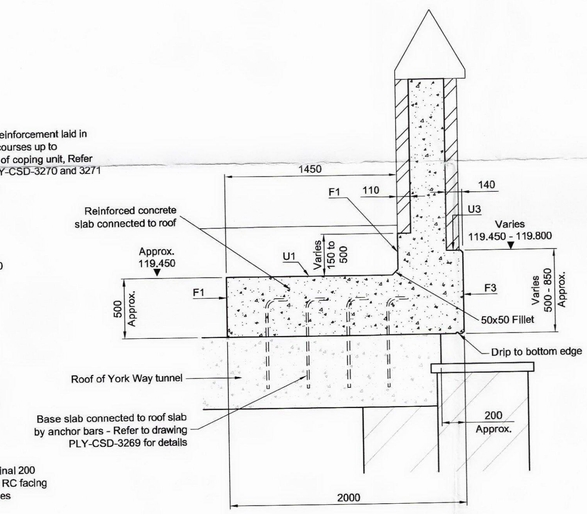

Section E-E
Scale 1:25

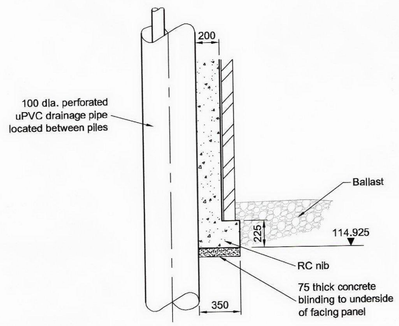

Section Through Base of Brick Clad Wall
Scale 1:25

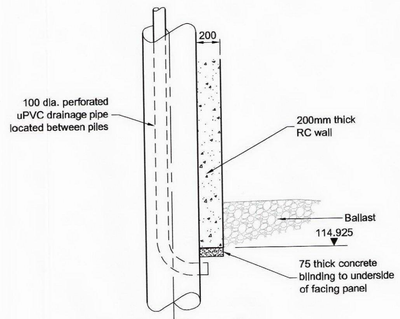

Section Through Base of RC Wall
Scale 1:25

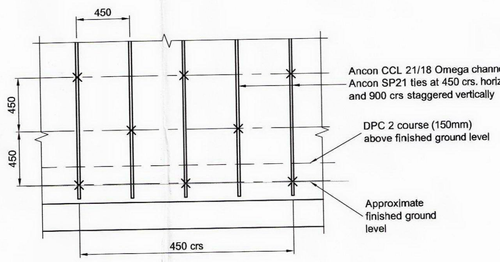

Part Elevation of Retaining Wall
Scale 1:25

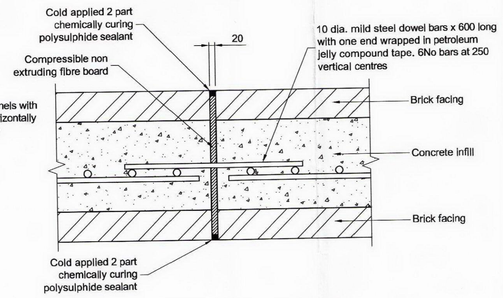

Movement Joint/Parapet Joint
Scale 1:10

NOTES

1. All dimensions in millimetres, unless stated otherwise.
2. All levels are in metres above LUL datum.
3. This drawing to be read in conjunction with drawing Nos PLY-CSD-3265 and 3267.
4. Blinding concrete and mass concrete to be standardised prescribed mix ST2 in accordance with BS 8500-2:2002.
5. Concrete for capping beam, wall facing and parapet infill to be a designed mix conforming to BS 8500-2:2002.
6. Capping beam and wall facing:
   Compressive class C32/40
   Design chemical class DC-2
   Maximum aggregate size 20mm
   Chloride class CL 0.40
   Consistence class S3

   Parapet infill:
   Compressive class C32/40
   Design chemical class DC-2
   Maximum aggregate size 10mm
   Chloride class CL 0.40
   Consistence class S3
7. All chamfers to be 20x20mm unless stated otherwise.
8. Class of concrete finish as follows:
   Formed surface F3
   Unformed surface U3
9. All buried surfaces to have 2 coates of bitumen waterproofing applied unless noted otherwise.
10. For capping beam, wall facing and parapet reinforcement details refer to drawings PLY-CSD-3269 and 3271.

Issue	Date	By	Chkd	Appd
01	31/10/08	SG	DAW	LO
Form B Issue				

corus
Railway Infrastructure Services
PO Box 298
York
Y01 6YH
T: 01904 454600
F: 01904 454601

John McAslan + Partners
49 Princes Place
London W11 4QA
Telephone:020 7727 2663
Facsimile: 020 7221 8835
mailbox@mcaslan.co.uk
www.mcaslan.co.uk

Client
Network Rail

Job Title
King's Cross Station Redevelopment Programme

Drawing Title
Cab Way Retaining Wall Capping Beam and Wall Facing Details

Scale at A1: As Shown

Discipline: Infrastructure

Drawing Status: **For Form B Approval**

Job No	Drawing No	Issue
B50058	PLY-CSD-3266	01

Do not scale