Plotted 23/11/2007 Filename L:\Projects\2000_etc\2047\CAD\plot\24-605-pt1.dgn

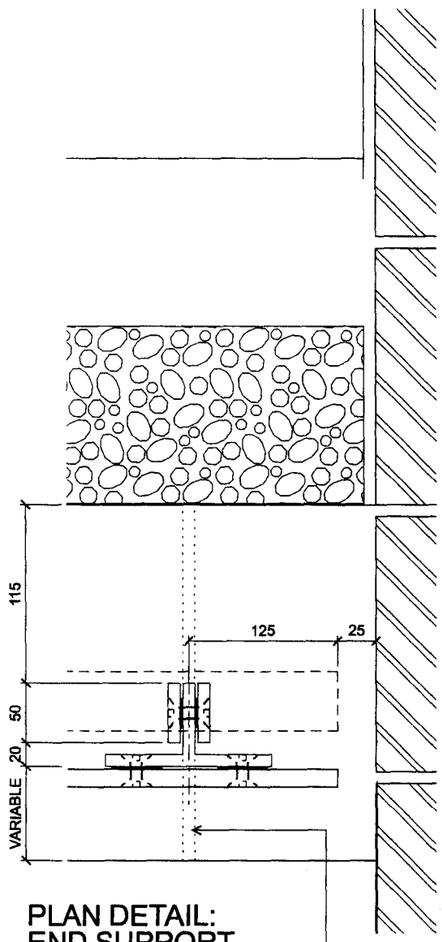

PLAN DETAIL:
END SUPPORT

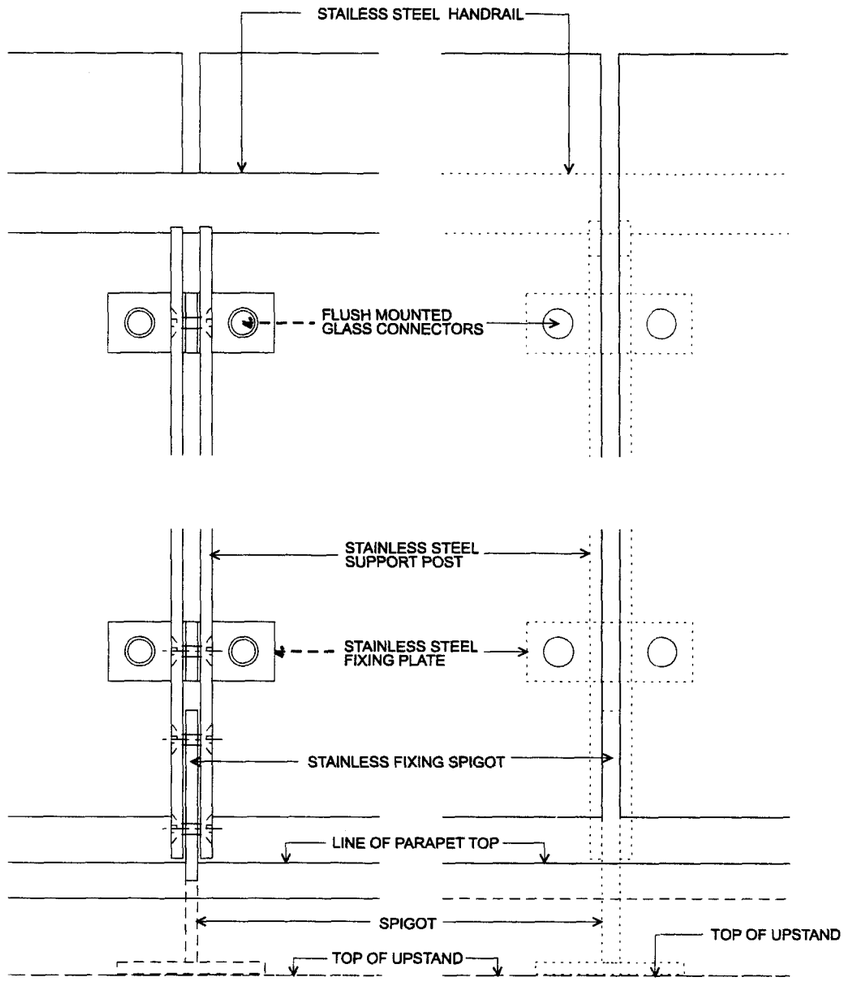

TERRACE
ELEVATION

STREET
ELEVATION

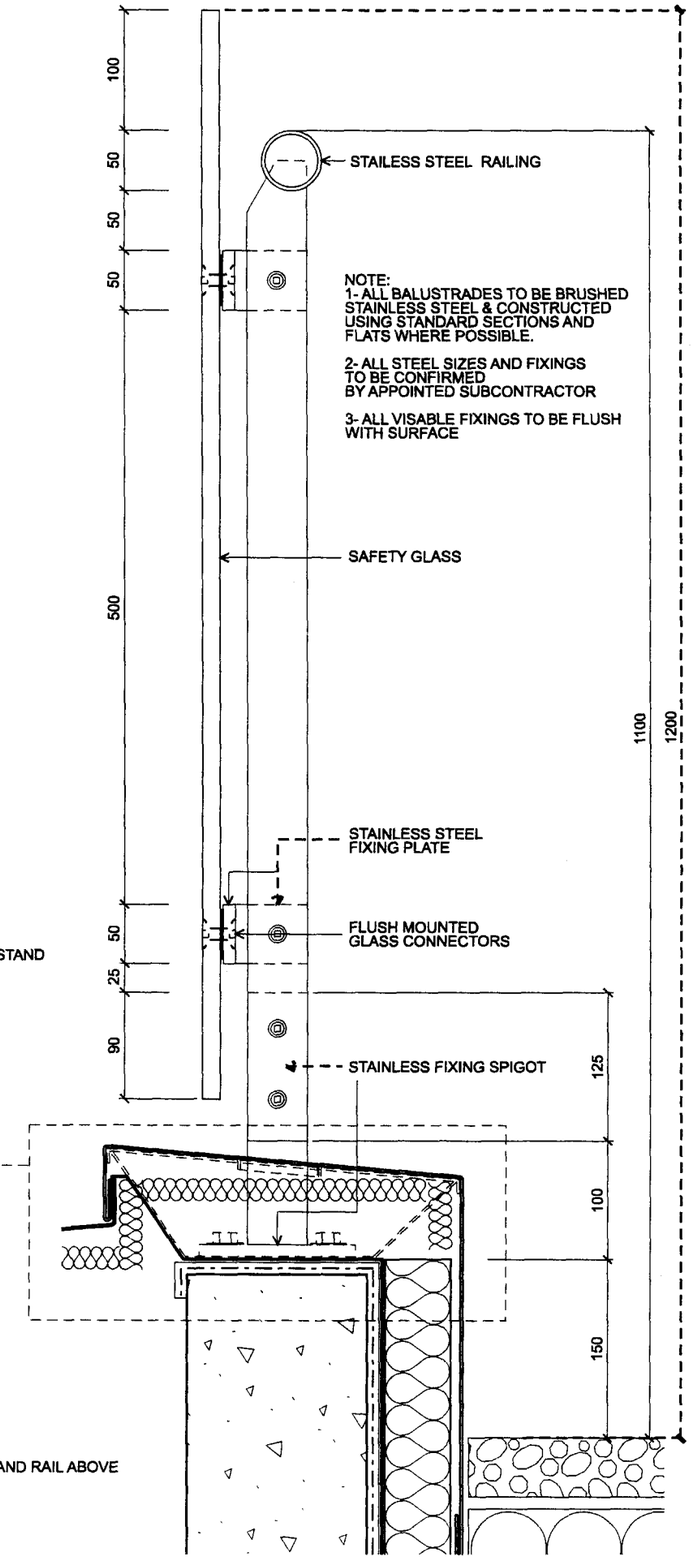

ALUMINIUM COPING TO BE
JOINTED AT SPIGOT PENETRATION

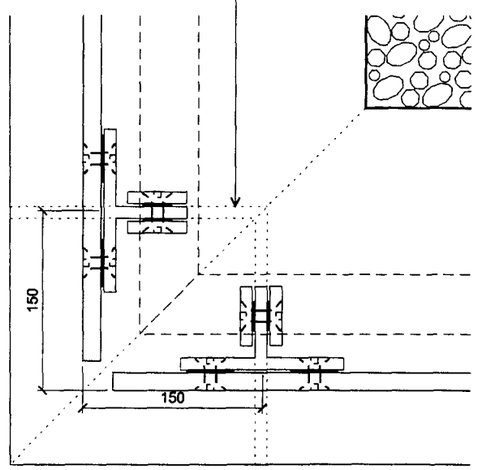

PLAN DETAIL : CORNER SUPPORT

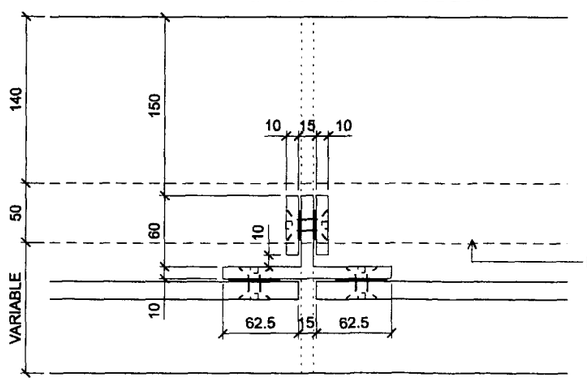

PLAN DETAIL : TYPICAL SUPPORT

TYPICAL CROSS SECTION

SHEPPARD ROBSON

ARCHITECTURE URBAN DESIGN PLANNING INTERIORS

LOCATION 77 PARKWAY, CAMDEN TOWN
LONDON, NW1 7PU
PHONE +44 0 20 7504 1700
FAX +44 0 20 7504 1701
WEBSITE www.sheppardrobson.com
E-MAIL sr.mail@sheppardrobson.com

DRAWING TYPICAL GLASS BALUSTRADE TO TERRACES

AMENDMENTS		
A	20.09.07	Issued for tender
B	20.09.07	Various minor amendments
B	25.10.07	New handrail proposal
C	16.11.07	New handrail proposal

SCALE @ A3 1:5
DATE 16.08.2007
ORIGINATED BY TJP
CHECKED BY BK
AUTHORISED BY BK
STATUS FOR COMMENT

DRAWING NO. 2047-24-605 REV. C

One Southampton Row

London

© COPYRIGHT

The copyright in this drawing is vested in Sheppard Robson and no licence or assignment of any kind has been, or is, granted to any third party whether by provision of copies or originals of the drawings or otherwise unless otherwise agreed in writing.

DO NOT SCALE FROM THIS DRAWING

The contractor shall check and verify all dimensions on site and report any discrepancies in writing to Sheppard Robson before proceeding with work.

FOR ELECTRONIC DATA ISSUE

Electronic data / drawings are issued as "read only" and should not be interrogated for measurement. All dimensions and levels should be read, only from those values stated in text, on the drawing.