PLAN

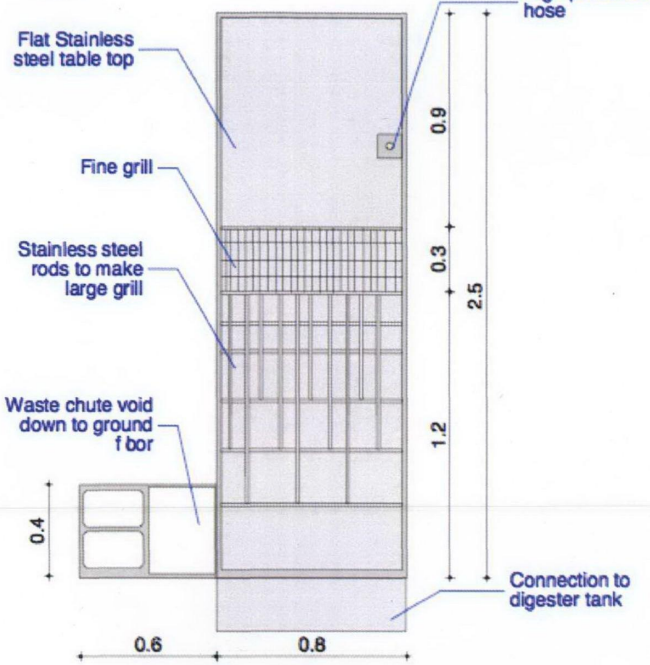

AXONOMETRIC

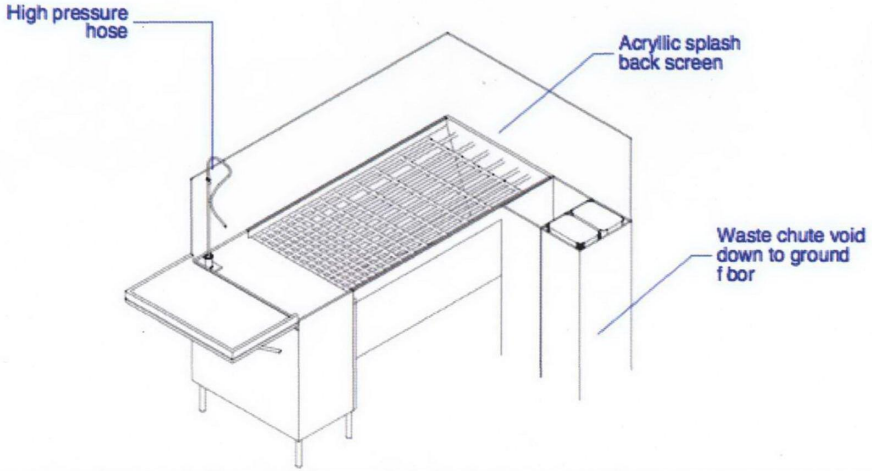

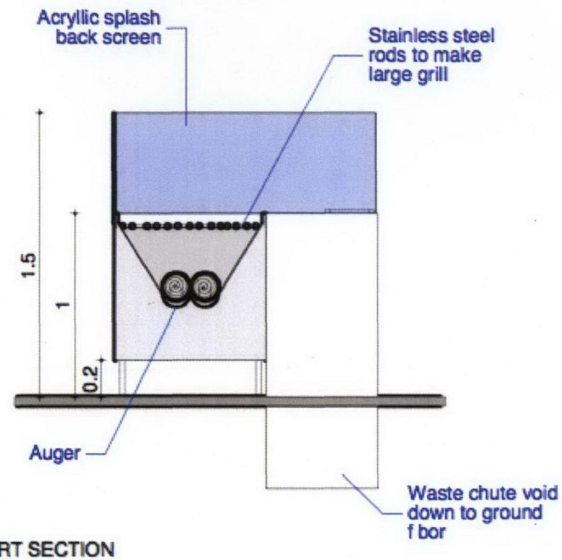

SHORT SECTION

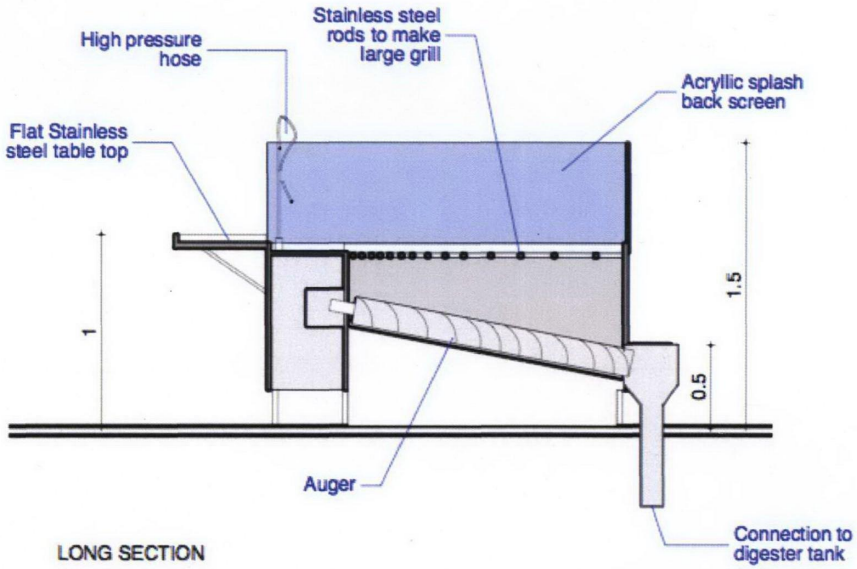

LONG SECTION

King's Cross AD PROJECT

Key Specifications

NB. DIMENSIONS TO BE REVIEWED

No.	Date	Revision Notes

St Pancras AD Project
Feed Stock input system
Schematic Design

Scale	Date
1:10	03/12/09
Page size: A3	Drawn by: ALC
Revision: 0	Drawing Number: AD-GD-001

Confidential Information
All designs are owned by the client

© Methanogen UK Ltd
www.Methanogen.co.uk

RECEIVED
16 MAR 2010