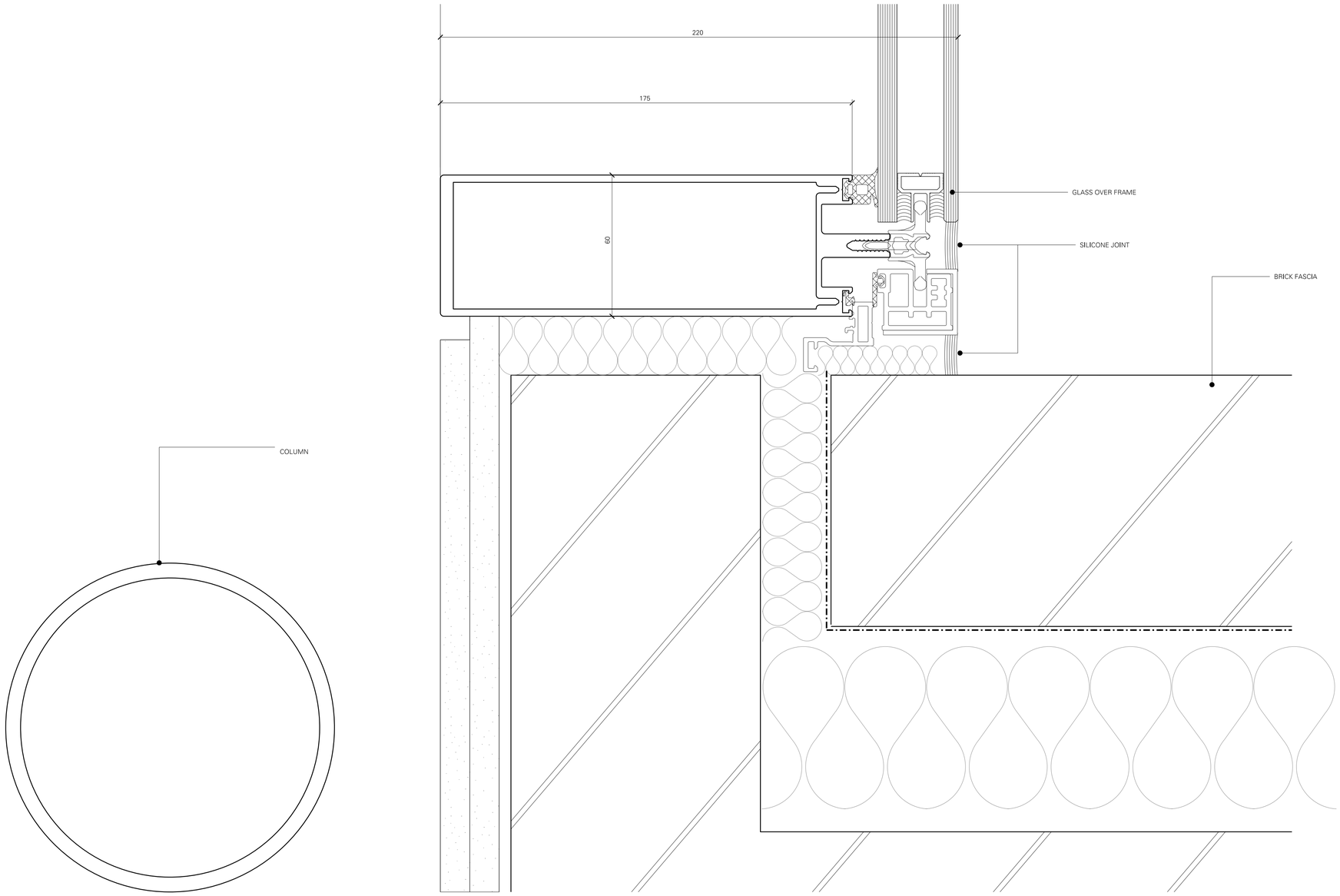

REV.	DATE	DESCRIPTION	REV.	DATE	DESCRIPTION

NOTES:

1. ALL DIMENSIONS IN MM
2. THIS DRAWING TO BE READ IN CONJUNCTION WITH ALL RELEVANT CONTRACT DOCUMENTS
3. THIS DRAWING TO BE READ IN CONJUNCTION WITH ALL ENGINEER'S DRAWINGS
4. DO NOT SCALE FROM THIS DRAWING
5. REPORT ANY ERRORS, CONTRADICTIONS, AND OMISSIONS TO THE ARCHITECT AS SOON AS POSSIBLE

KEY:

BEN ADAMS ARCHITECTS

Third Floor
99 Southwark Street
London
SE1 0JF

020 7633 0000 T
020 7633 0093 F
www.benadamsarchitects.co.uk
info@benadamsarchitects.co.uk

JOB NO: A447

SCALE: 1:1 @ A1

STATUS: PLANNING CONDITIONS

DRAWING NAME: TYPICAL GLAZING DETAILS - GLAZED MULLION TO NEW BRICK FASCIA

PROJECT NAME: MACKLIN STREET

DRAWING NO: APPENDIX 8B 06