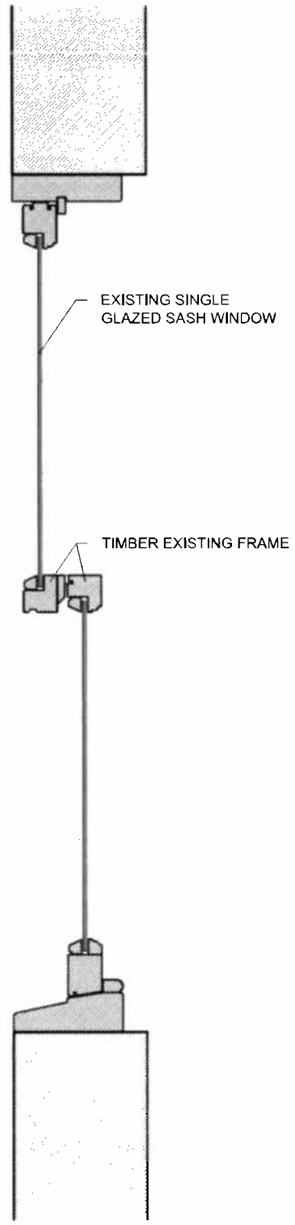

1 TOP FLOOR EXISTING WINDOW - SECTION_
SCALE 1:5

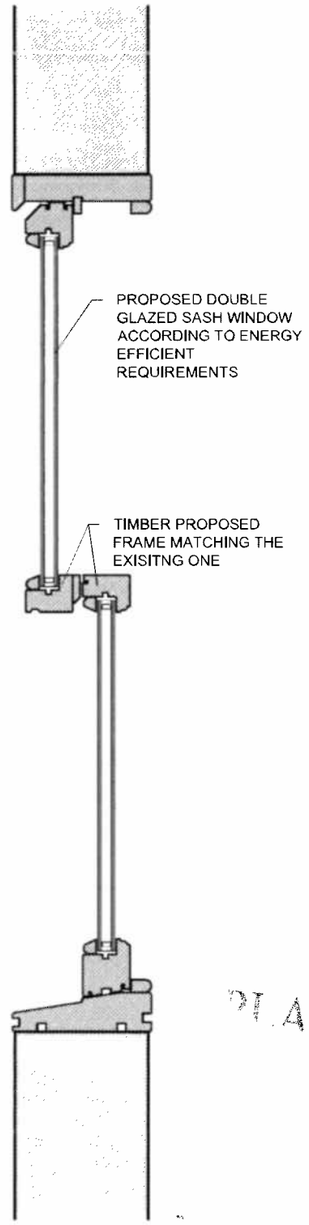

2 TOP FLOOR PROPOSED WINDOW - SECTION_
SCALE 1:5

PLANS APPROVED

Contractors must verify all dimensions on site before any works are commenced.
This drawing remains the property of
EZRA ATTIA DEVELOPMENTS LIMITED
and may not be reproduced in any way without prior consent.

Toutes dimensions doivent etre verifiees par l'entrepreneur sur les lieux avant de commencer les travaux.
Ce dessin appartient uniquèment a la compagnie
EZRA ATTIA DEVELOPMENTS LIMITED
dont la reproduction en est interdite sans autorisation.

2012/ 0700/D

-	-	-

REVISIONS/NOTES

FOR PLANNING

EAD Ltd
3 Belsize Place
London NW3 5AL
Tel: 44(0)20 7431 2627
Fax: 44(0)20 7794 0198
email: studio@eadl.co.uk
www.eadl.co.uk

Client
EZRA ATTIA

Project
7 PRINCESS MEWS

Area	TOP FLOOR			
Description	WINDOW CROSS SECTION			
Scale 1:5 @ A2	Drawn MC	Approved -	Date 02.12	Project Number -
Drawing Number	WD-30-07		Revision -	- - - - - - - - - - - -

CAD File No.	-
X-REF File Name	-